| NO. | DESCRIPTION: |
|---|---|
| 1. | ENDPOINT TRANSMITTER SUPPORT SHELF. |
| 2. | 1 INCH DIAMETER PICK HOLE. |
| 3. | 1/8" X Ø3/4" RARE EARTH MAGNET. |
| 4. | IMPRINTED "M" LOCATER MARK UNDER MAGNET. |
| 5. | MANUFACTURER NAME. |

NOTES:

A. MATERIAL SHALL BE HIGH DENSITY POLYETHYLENE.
B. LOAD RATING = HS20 HEAVY DUTY.
C. COLOR SHALL BE CHARLOTTE GRAY.
D. MANUFACTURERS; SOUTHEASTERN, DFW AND SIGMA.

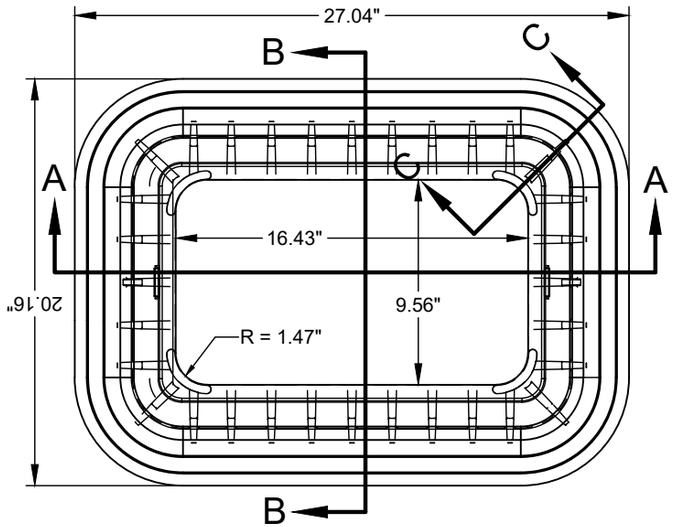


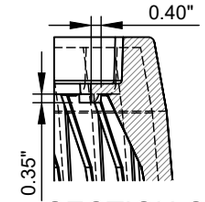


SECTION C-C

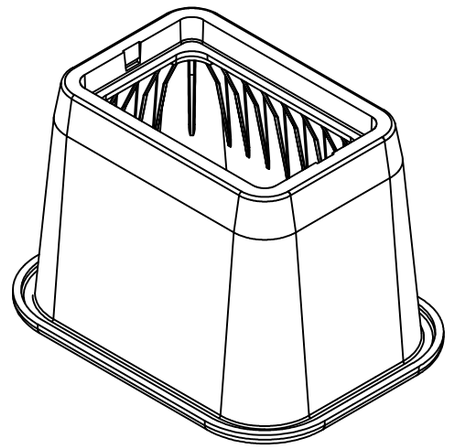

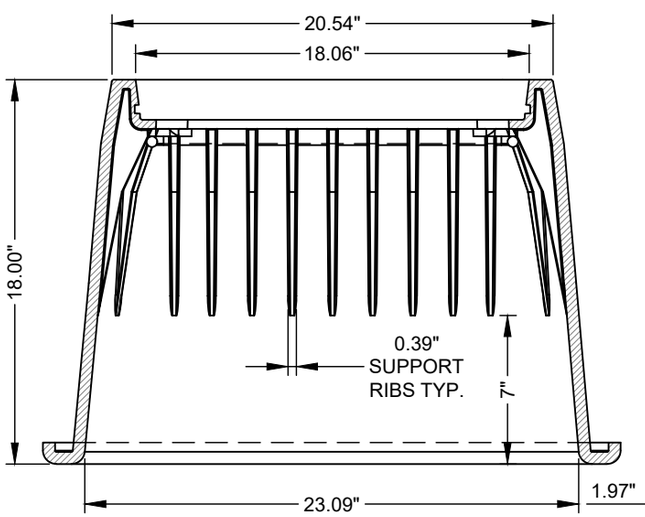


SECTION A-A

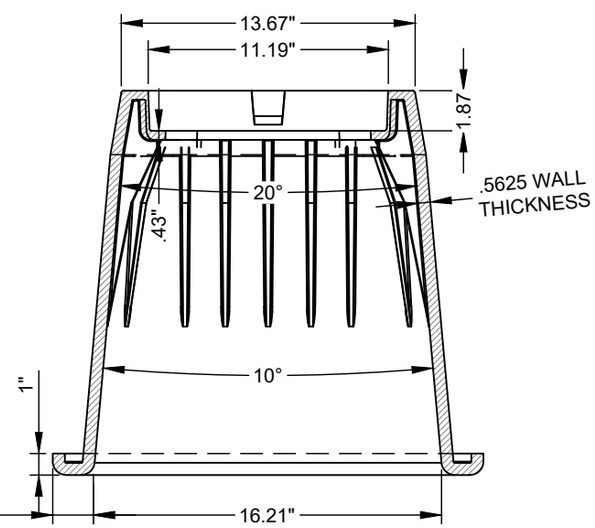


SECTION B-B

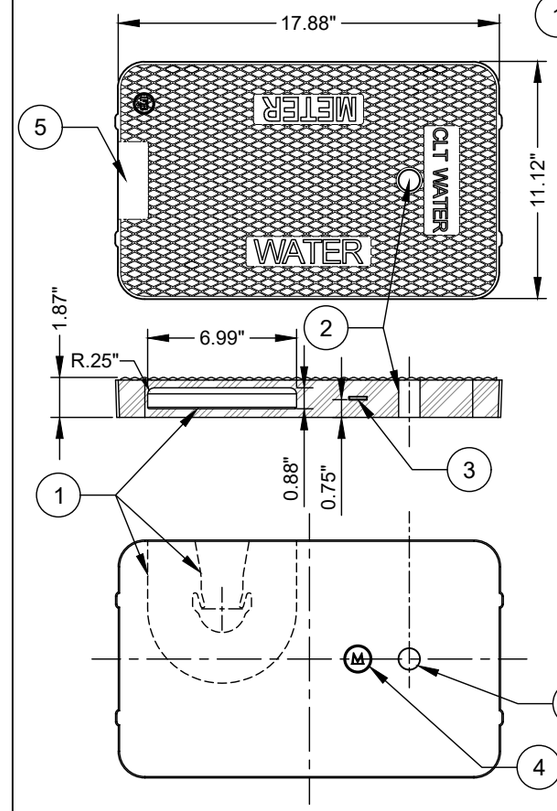


BOTTOM VIEW

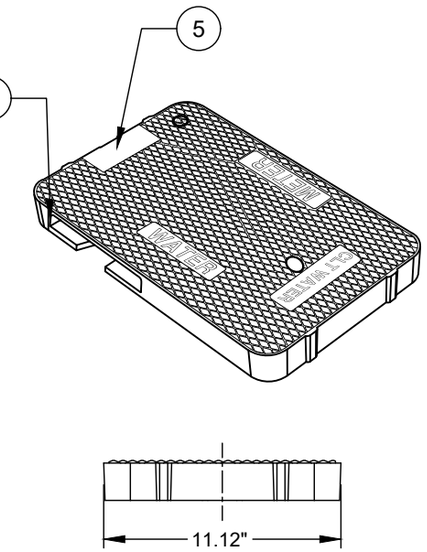


METER BOX BODY WEIGHT = APPROX. 20 - 24 LBS. LID WEIGHT = APPROX. 8 - 14 LBS.

CHARLOTTE WATER

CHARLOTTE WATER
A CITY OF CHARLOTTE DEPARTMENT
STANDARD DETAILS
WATER METERS

PLASTIC METER BOX AND LID FOR 3/4-INCH AND 1-INCH DOMESTIC WATER SERVICE

NO SCALE

VERSION 2.0

DATE 01/2026

DETAIL 15.2.4