AGENDA

Meeting Type:	SPECIAL
Date:	05/30/1995
FY96 & FY97	BUDGET WORKSHOP

City of Charlotte, City Clerk's Office

City of Charlotte
FY96 & FY97 Budget Workshop
May 30, 1995
5:00-8:00 p.m.

5·00 Dinner & Announcements – Mayor

5·15-6·00 FY96-97 Focus Area Budget Review on Transportation – Julie Burch

6 00-6 30 Key Business Budget Discussion and Questions – Vi Alexander
- Transportation
- Engineering and Property Management
- Aviation

6:30-7:30 FY96-97 Focus Area Budget Review on Restructuring Government – Pam Syfert
- Cutting Costs
- Functional Consolidation
- Workforce Preparedness
- Services, Infrastructure and Resource Priorities
- Competition

7 30-8 00 Key Business Budget Discussion and Questions
- Solid Waste Services
- Business Support Services
- Human Resources
- Finance
- Budget and Evaluation

Position History
FY92-FY97

The following information details the position changes from FY92 through FY97 that have resulted in a net increase of 18 positions to the City Payroll (Reductions exclude the transfer of 216 Parks and Recreation employees to Mecklenburg County.)

Additions

There have been 701 positions added since 1992, exclusively in Police, in mandated program areas and in support of growth and capital expansion.

Purpose	Activity	Positions Increased
Public Safety	Additional Patrol Officers	105
Public Safety	Police Consolidation	192
Public Safety	Community Safety Plan	189
Federal Mandate	Storm Water	28
Federal Mandate	ADA Compliance in STS	35
Growth	FY92 Annexation	96
Growth	FY94 Annexation	46
Growth	CMUD Capital Program	2
Economic Development	Airport Capital Expansion	6
Total		**701**

Eliminations

There have been 683 positions eliminated from the City payroll between FY92 and FY97 These positions have been reduced through the following programs

Year	Program	Positions Eliminated
1992	Workforce Challenge	113
1993	Rightsizing	272
1994	Rollout Garbage Service	157
1995	Restructuring Government	141
Total		**683**

CITY OF CHARLOTTE
BUDGET AND EVALUATION DEPARTMENT
MEMORANDUM

RECEIVED
JUN 1 1995
OFFICE OF CITY CLERK

TO: All Key Business Executives

FROM: Nancy C Elliott for/
Viola T Alexander, KBE
Budget and Evaluation

DATE: June 1, 1995

SUBJECT: Services Assessment Update

Attached is the report on the citizen survey/services assessment update that was handed out to City Council at Tuesday evening's budget workshop It contains both the narrative report of the citizen portion of the survey prepared by MarketWise and a short comparison summary of the survey results of the citizens, Mayor/City Council and the Executive Team prepared by B&E. If you have any questions, contact Nancy Elliott (x5013)

City of Charlotte
1995 Citizen Survey
Services Assessment Update

Background

The 1995 Citizen Survey was used to update the information received from the original 1992 services assessment process. Highlights of the citizen responses were presented to City Council at their May 1, 1995 workshop. Attached is the narrative portion of the report from MarketWise, Inc who conducted both the citizen and Mayor/Council portions of the survey The entire MarketWise, Inc report, with data tables and cross tabulations of the results of each question by area of the city, length of residence in the City, age, gender and race is in the Council library

The original services assessment looked at 41 major service categories within City government's responsibility In order to obtain the most useful data possible for the budget process, MarketWise staff suggested that only the lower priority services be included in this update survey and that those lower priority services be explored in more detail Therefore, this report looks at the ranking of 12 of 15 lower priority categories (three were dropped because they were governed by ordinances or other legal mandates and couldn't be cut or eliminated) These categories contained 53 specific services or programs which the City of Charlotte provides either directly or through contract with a private agency The rankings were made by 409 randomly selected citizens, the Mayor and City Council and senior staff of City Government

This report provides a comparison of the results of the senior city staff rankings, the Mayor/Council ratings and the citizen ratings for the portion of the survey questions dealing with the services assessment process

Results

This data is intended to be an adjunct in the budget deliberation process The report focuses on those services which received less than 50% support, defined to be a response of "high" or "very high" budget priority, from the citizens, Mayor/Council and senior staff Fifteen of the 53 services included in the survey received less than 50% support from all three groups and are included in the list below.

The list below is in descending order, by the percentage of citizens ranking the service as a "high" or "very high" budget priority The number included by each service is the citizen rating See Table A for all three numerical rankings

- Plant and maintain flowers and landscaping on City property (48%)
- Operate and maintain cemeteries (43%)

- Pick up and destroy unwanted / stray animals (41%)
- Rescue injured animals (41%)
- Historic Districts and Neighborhoods (40%)
- Mint Museum (39%)
- Contract for spay / neuter services (35%)
- Centralina COG (34%)
- Sister Cities (33%)
- Arts and Science Council (33%)
- Afro-American Cultural Center (32%)
- Pet Adoption Services (32%)
- Animal lost and found (31%)
- Art in public buildings (18%)
- Pressure wash Tryon Street Mall sidewalks nightly (17%)

The conclusions to be drawn from these results are that these services and agencies have less public, political and city management support than the other 37 services or agencies on the list While some perhaps can be eliminated entirely, others could only be reduced in scope In either case, reductions in these services would have less public impact than the other services listed in the survey

Table A shows all 53 services included in the survey, ranked in order of citizen support The first four columns (two each for city staff and Mayor/Council responses) show comparative data by average (mean) score and % ranking "high" or "very high" budget priority The fifth and sixth column are the citizen responses

It should be noted that only the lower third of the original list of 41 services from the 1992 services assessment process were included in the 1995 services assessment update.

Table A
Comparison of Services Assessment Responses
Staff – Mayor/Council – Citizens

Question #		Staff response mean	Staff response % high/very high	Council response mean	Council response %high/very high	Citizen response mean	Citizen response %high/very high
56	Provide natural disaster planning & response	4 19	81 25%	4 54	100 00%	4 0	78 00%
21	Police and neighborhood dialogues	4 13	81 25%	4 00	81 82%	3 9	74 00%
46	Pick up and destroy dangerous animals	4 35	88 24%	3 81	72 73%	3 9	73 00%
38	Collect and dispose of dead animals	3 82	64 71%	4 00	63 64%	3 9	73 00%
48	Provide rabies control	4 47	94 12%	4 18	90 91%	3 8	72 00%
57	Coordinate training/response to hazardous matena	4 13	81 25%	4 27	81 82%	3 9	71 00%
13	Victim's Assistance	3 12	52 94%	3 63	72 73%	3 9	69 00%
17	Children's Services Network	1 94	11 76%	3 54	45 45%	3 8	68 00%
15	Stop the Killing	2 58	29 41%	3 18	36 36%	3 9	65 00%
55	Provide nuclear power station emergency response	3 63	56 25%	4 10	80 00%	3 7	63 00%
40	Flush dirty streets when needed	3 53	47 06%	4 09	81 82%	3 6	63 00%
14	Youth Involvement Council	2 38	18 75%	3 27	36 36%	3 7	62 00%
32	Cut grass and brush on City property	4 00	87 50%	3 90	81 82%	3 6	58 00%
18	Carolinas Partnership	2 71	23 53%	3 00	27 27%	3 6	57 00%
36	Collect and dispose of appliances	3 94	64 71%	4 00	81 82%	3 5	57 00%
20	Investigate allegations of police misconduct	4 13	64 71%	3 90	72 73%	3 6	56 00%
31	Operate Customer Service Center	3 81	68 75%	4 36	90 91%	3 5	54 00%
9	Discovery Place	2 65	5 88%	3 00	27 27%	3 5	54 00%
53	Operate animal shelter	3 18	29 41%	3 36	27 27%	3 5	52 00%
49	Investigate complaints of animal cruelty	2 94	23 53%	3 09	36 36%	3 5	50 00%
35	Plant and maintain trees	3 44	43 75%	3 36	45 45%	3 4	50 00%
33	Plant/maintain flowers/landscaping on City propert	3 31	37 50%	3 36	36 36%	3 4	48 00%
37	Collect and dispose of non-recyclables	3 94	64 71%	4 00	72 73%	3 3	48 00%
10	Nature Museum	2 41	5 88%	2 72	18 18%	3 4	47 00%
28	Provide info about City events to media	3 50	50 00%	3 63	63 64%	3 3	45 00%
42	Clean "Tryon Street Mall" area	3 76	64 71%	3 81	81 82%	3 3	45 00%
27	Notify public of City meetings	4 06	81 25%	4 36	90 91%	3 3	44 00%
23	Enforce the Fair Housing Ordinance	3 00	35 29%	3 90	54 55%	3 3	44 00%
34	Operate and maintain cemeteries	2 19	6 25%	2 63	27 27%	3 3	43 00%
47	Pick up and destroy unwanted/stray animals	3 12	35 29%	3 00	36 36%	3 2	41 00%
45	Rescue injured animals	2 88	11 76%	2 36	10 00%	3 2	41 00%
44	Clean up during/after special events in CBD	3 65	64 71%	3 45	54 55%	3 2	41 00%
52	License animals	3 63	47 06%	3 72	54 55%	3 2	41 00%
11	Historic Districts and neighborhoods	2 59	29 41%	2 63	30 00%	3 2	40 00%
8	Performing Arts Center	2 29	5 88%	2 54	9 09%	3 2	40 00%
22	Investigate & resolve employment discrimination c	2 44	11 76%	3 09	54 55%	3 2	40 00%
7	Mint Museum	2 18	5 88%	2 09	10 00%	3 2	39 00%
24	Mediate Landlord Tenant disputes	2 88	37 50%	3 72	63 64%	3 2	39 00%
39	Sweep all City streets on regular schedule	3 00	23 53%	3 81	63 64%	3 2	38 00%
41	Collect garbage from Uptown businesses	3 35	52 94%	3 54	54 55%	3	36 00%
51	Contract for spay/neuter services	3 88	11 76%	3 09	27 27%	3 1	35 00%
19	Centralina Council of Governments	2 29	11 76%	2 45	18 18%	3 2	34 00%
16	Sister Cities	2 24	5 88%	2 81	9 09%	3 1	33 00%
6	Arts and Science Council	2 65	11 76%	2 81	27 27%	3 1	33 00%
5	Afro-American Cultural Center	2 76	17 65%	2 45	30 00%	3 1	32 00%
50	Provide pet adoption services	2 13	0 00%	2 30	0 00%	3	32 00%
26	Produce/distribute city brochures/newsletters	3 56	56 25%	3 63	45 45%	3	31 00%
54	Provide animal lost and found	2 24	0 00%	2 90	18 18%	3	31 00%
30	Provide staff/equipment for public meetings	3 31	37 50%	3 90	81 82%	3	28 00%
29	Coordinate special events, news conferences	3 31	50 00%	3 54	54 55%	3	27 00%
25	Operate Gov t Cable Channel 16	3 00	25 00%	3 63	63 64%	2 7	22 00%
12	Art for new City buildings	2 53	23 53%	2 36	9 09%	2 4	18 00%
43	Pressure wash Tryon Street mall sidewalks	3 00	35 29%	3 09	27 27%	2 5	17 00%

Public Opinion Survey of City Services

Summary Report
May 22, 1995

MarketWise

TABLE OF CONTENTS

Background and Objectives 1

Methodology 2

Perceptions of City Government 3

Overall Performance 3
City Spending 4
Essential Services 5

Charlotte City & Mecklenburg County
Government Consolidation 7

Support for Consolidation 7
Benefits of Consolidation 8

City Services 9

Service Area Rankings 9
Assessment of Service Area Programs 10
Emergency Management 12
Funding to Community Agencies 12
Customer Service Center 13
Collection of Miscellaneous Items..... 13
Community Relations 13
Landscape Maintenance 14
Urban Forestry 14
Street Cleaning 14
Animal Control 15
Funding to Cultural Agencies 16
Public Information 16
Maintain Central Business District 17

Capital Projects 18

Importance of Capital Projects 18
Funding for Capital Projects 19

BACKGROUND AND OBJECTIVES

The present study builds upon findings from the 1992 Assessment of City Services. The 1992 study identified and defined 41 service areas funded by the City of Charlotte. These service areas were tested and ranked in order of importance.

The 1995 study focuses on 12 of the 15 service areas that ranked in the bottom third (in terms of importance) in the 1992 service assessment. Three service areas were dropped from consideration because they were legally mandated services.

This study was designed to give the city detailed information and direction about service areas and specific programs that could be considered for funding elimination or reduction. Specific research objectives for this study were to:

- Measure overall perceptions of City Services
- Determine importance of specific services Charlotte City Government provides
- Determine citizens' views on City-County government consolidation
- Determine citizen's opinions about capital needs
- Measure willingness to pay more taxes

Study questions were worded with neutral phrasing to get respondents true opinions. The wording for specific service area programs were taken from City descriptions of the programs. Benefits or purposes of the programs were not included in descriptions.

METHODOLOGY

Telephone interviews were conducted with 409 City of Charlotte residents. The sample for telephone interviewing was purchased from Survey Sampling, Inc, and was drawn proportionally across all areas of the City. Areas of the City, as defined by zip code, are represented in the final sample as follows:

North Charlotte	14%
South Charlotte	43%
East Charlotte	33%
West Charlotte	10%

Survey participants were screened to ensure they were residents of Charlotte. One male or female head of household was randomly selected to participate in the study. This ensures that both males and females are represented in the final sample. The final sample consists of 48% males and 52% females.

MarketWise developed the survey questionnaire with input from the City of Charlotte. The final questionnaire was approved by the City and took 22 minutes on average to administer.

All interviewing was conducted from the MarketWise central telephone location under the supervision of a MarketWise staff member. Four dialing attempts were made to each sampled telephone number to ensure hard to reach respondents were included in the study, and that all sample members had an equal probability of being included in the final sample.

A sample size of 400 has a sampling error of plus or minus five percentage points at the 95% confidence level. This means that results from 95 out of 100 samples would vary no more than five percentage points (higher or lower) from results obtained if all members of the population were surveyed.

PERCEPTIONS OF CITY GOVERNMENT

Overall Performance

The average rating of overall performance for Charlotte City Government is 3.4. Overall performance was rated on a 1 to 5 scale where 1 was very poor and 5 was excellent. Chart 1 shows the percentage of respondents giving each rating on the scale. Almost half of the respondents (46%) rate overall performance as good, and 38% rate it as fair.

Chart 1

Overall Performance of Charlotte City Government

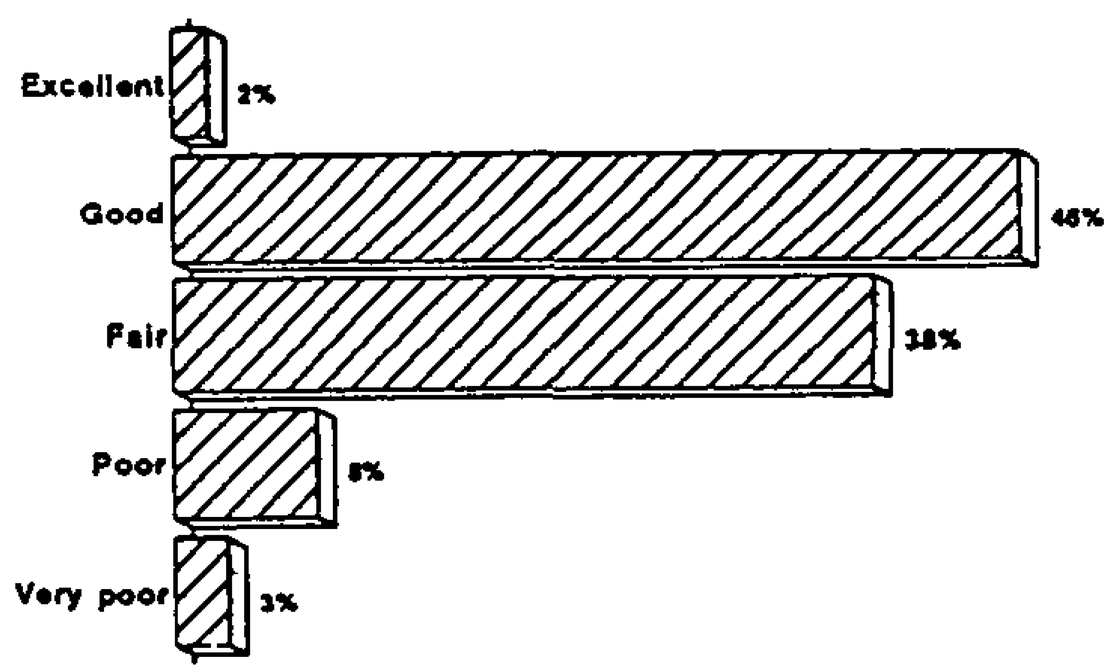

Citizens of West Charlotte (n=40) give City government a slightly lower than average rating for overall performance at 3.1. Almost a quarter of respondents (23%) from West Charlotte give a poor or very poor rating.

City Spending

The average rating for Charlotte City Government on spending tax dollars wisely is 3.0 on the same 1 to 5 scale where 1 means very poor and 5 means excellent. Forty-four percent of respondents rate City Government fair on spending (See Chart 2). Again respondents from West Charlotte give lower ratings (2.7 on average) than respondents from other areas of Charlotte.

Chart 2
Performance of Charlotte City Government
On Spending Tax Dollars Wisely

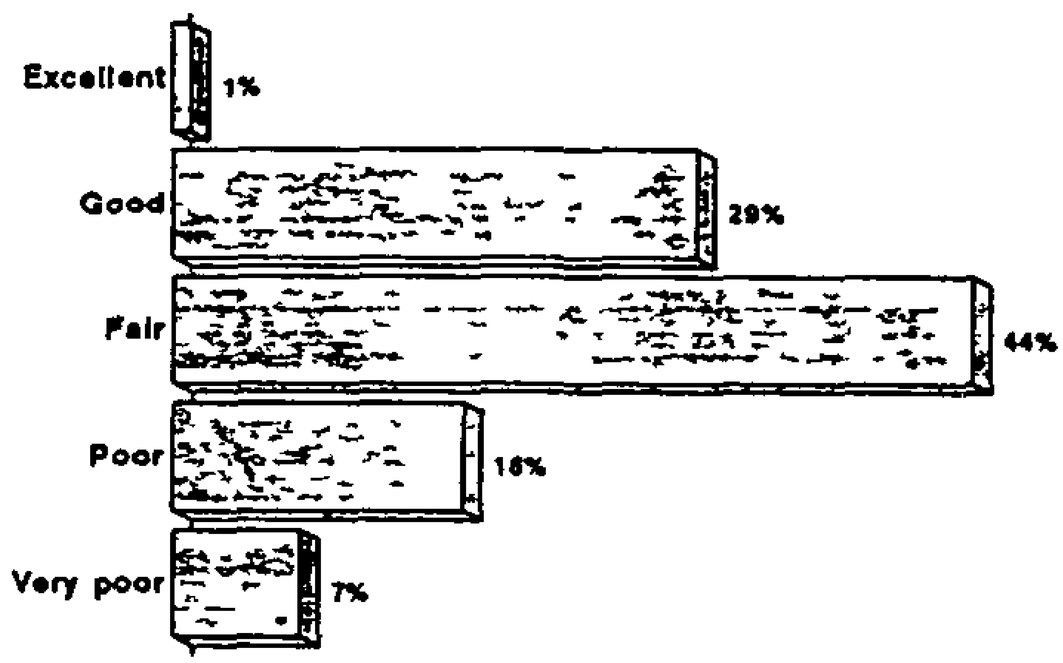

In general, respondents feel City government "wastes taxpayer money" on unnecessary services. Sixty-six percent of respondents in this study agree with this statement (35% agree somewhat and 31% agree strongly). Further, less than half (46%) of study respondents agree that City government "works to keep costs down" (33% agree somewhat and 13% agree strongly). Less than one third (31%) of respondents feel the City spends the right amounts of money for the services it provides.

Essential Services

As shown in Chart 3, the most important services the City provides are police/law enforcement (48%), garbage and sanitation services (33%), and fire/rescue services (26%). These are high priorities for all respondents regardless of area of residence in the City, length of residence, age, gender or race.

Chart 3
Most Important Services City of Charlotte Provides

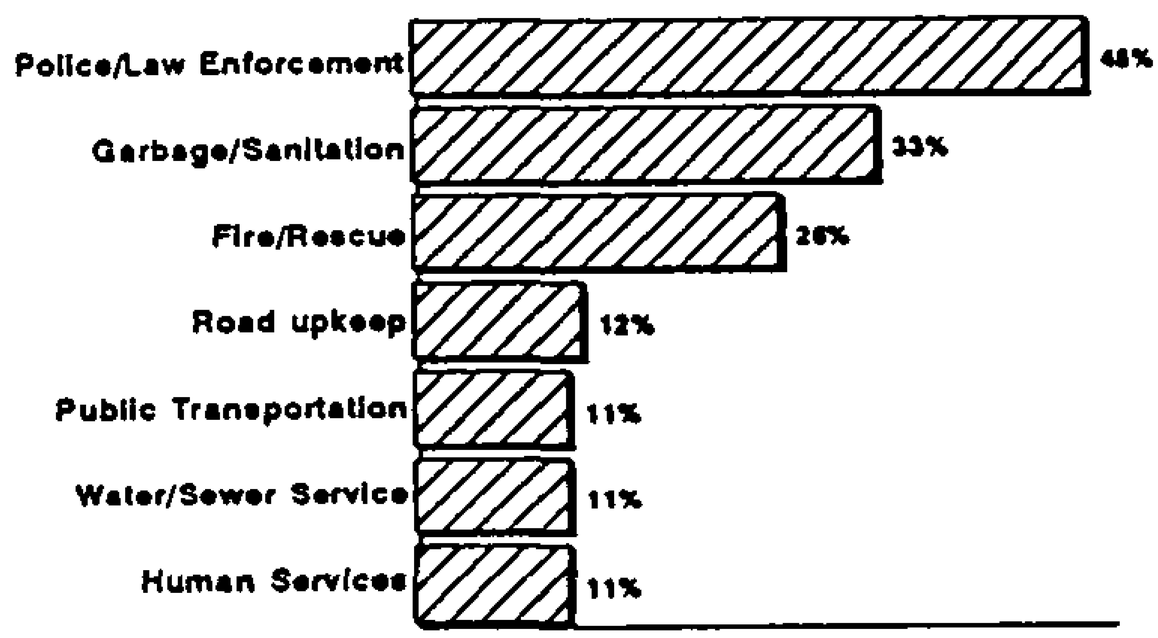

Multiple response question.

Charlotte City Government receives its highest ratings for providing essential services. The average rating is 3.9 on the 5-point scale. Sixty-four percent of respondents rate City Government good, and 15% rate the City excellent in providing essential services (See Chart 4).

Chart 4
Performance of Charlotte City Government On Providing Essential Services

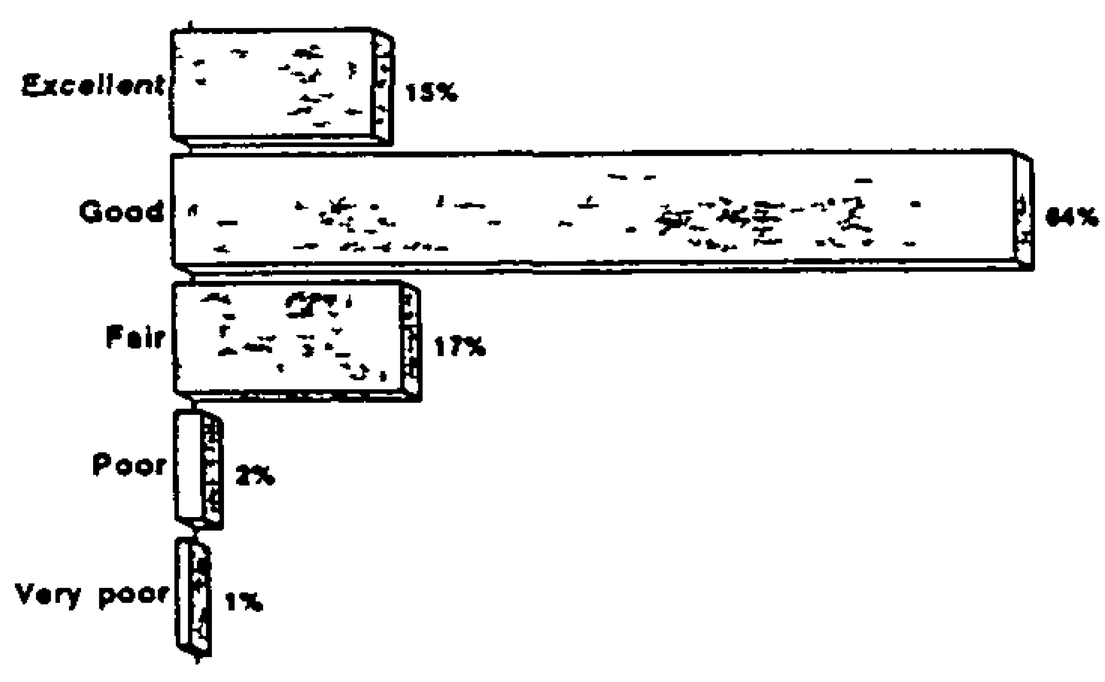

The majority of respondents (71%) indicate a willingness to pay $10 more in property taxes a year to help fund essential services. Six percent of the respondents said they would pay $5 more per year. However, nearly a quarter (23%) of respondents are not willing to pay any more property taxes.

According to respondents, the best way for the City to get funds for essential services is through taxes. When asked how the City could get funds for essential services if there was a problem funding them at current levels, respondents said the City could raise taxes (19%), raise property taxes (15%) or raise other taxes like sin taxes or commuter taxes (13%). Other responses targeted spending practices where respondents suggested cutting spending (12%) or spending money more wisely (10%).

CHARLOTTE CITY AND MECKLENBURG COUNTY GOVERNMENT CONSOLIDATION

Support for Consolidation

Respondents show strong support for consolidating Charlotte City and Mecklenburg County governments. As Chart 5 shows, 61% of respondents say they would vote for consolidation if there were a vote today.

Chart 5
Acceptance of City-County Consolidation

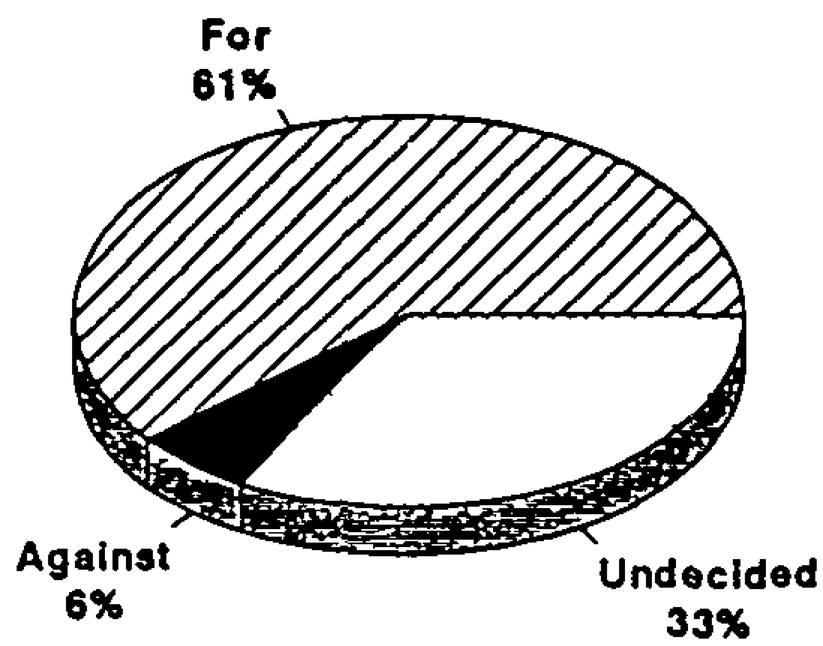

Respondents support consolidation because they believe it will eliminate duplicated services and will save money (See Table 1). Twenty-three percent say consolidation will eliminate the duplication of services, while 20% say it will save money by not duplicating services. Another 15% simply say consolidation will save money.

Table 1
Reasons for Supporting Consolidation

	% of Respondents Who Support Consolidation
Eliminate duplication of services	23%
Save money by not duplicating services	20%
More efficient	17%
Save money	15%
City is the county anyway	14%
Lower taxes	12%
Government will run better	12%

Of the 409 survey participants only 24 (6%) oppose City-County Consolidation. Reasons respondents give for being against consolidation include: it will not be efficient, will put too much power in one place, the city and county have different purposes so they need to be separate, and taxes would be higher.

Thirty-three percent of respondents are undecided on the question of consolidation. Of these respondents, most say they need more information about the consolidation or they don't know how services will be handled under consolidation.

Benefits of Consolidation

Respondents feel City-County consolidation will allow for better future planning and growth. Three-fourths (75%) agree strongly or somewhat with this statement. In addition, 72% say consolidation will save money, and 71% say it will allow for better services for citizens. Further, only 25% of respondents feel consolidation will create a big government bureaucracy.

CITY SERVICES

Service Area Rankings

Table 2 presents the current ranking of each selected service area, the 1992 rankings of each service area, and the aggregated mean rating of the service area. Aggregated mean ratings are computed by averaging the ratings of all the programs included in the service area.

The Customer Service Center and Urban Forestry service areas are single services - no additional programs make up these service areas. Therefore, their aggregated mean ratings are the same as the ratings of the single service area.

Table 2
Selected Service Areas Tested in 1995 Study

1995 Ranking	1992 Ranking*		Mean Ratings
1	5 (31)	Emergency Management	3.9
2	7 (33)	Funding to Community Agencies	3.6
3	11 (37)	Customer Service Center	3.5
4	4 (30)	Collection of Miscellaneous Items	3.5
5	8 (34)	Community Relations	3.4
6	6 (32)	Landscape Maintenance	3.4
7	9 (35)	Urban Forestry	3.4
8	1 (27)	Street Cleaning	3.4
9	3 (29)	Animal Control	3.3
10	10 (36)	Funding to Cultural Agencies	3.1
11	12 (40)	Public Information	3.1
12	2 (28)	Maintain Central Business District	3.0

* The rankings based on the 1992 study have been altered to reflect relative importance rankings. In 1992, these service areas were ranked between 27 and 41. The number in parentheses indicates the 1992 ranking.

As this table shows, all selected service areas are of medium importance since ratings are primarily in the middle of the 1 to 5 scale. The most important services among those selected for this study are: Emergency Management, Funding to Community Agencies, Customer Service Center, and Collection of Miscellaneous Items. The least important service areas are Funding to Cultural Agencies, Public Information, and Maintaining the Central Business District.

Assessment of Service Area Programs

In all, 53 specific programs funded by the City were evaluated in this study. Table 3 lists the programs for each service area ranked in order of priority according to the average rating for each program. The table also shows the percent of respondents who give either a very high or high budget priority rating for each program.

From this chart we see that the programs have average ratings in the middle of the scale. This indicates a medium budget priority for the programs. There is low variation in the average ratings. Most programs have average ratings between 3.0 and 3.5 on the 5 point scale.

Looking at the percentage of respondents giving the top ratings shows more variabliity in the priority placed on the individual programs. From the percent of top ratings we see that just 19 programs are viewed as budget priorities (high or very high) by the majority of sample respondents (more than 50% give one of the top two ratings).

Table 3
Overall Assessment of Selected City Services

	Mean Rating	% Rating High or Very High
Natural disaster planning & response	4.0	78%
Police Neighborhood Dialogues	3.9	74%
Pick-up & destroy dangerous animals	3.9	73%
Response to hazardous materials incidents	3.9	71%
United Family Services	3.9	69%
Stop the Killing	3.9	65%
Rabies control	3.8	72%
Child Services Network	3.8	68%
Flush dirty streets	3.6	63%
Nuclear emergency response program	3.7	63%
Collect & dispose of dead animals	3.7	62%
Youth Involvement Council	3.7	62%
Mow City property	3.6	58%
Carolinas Partnership	3.6	57%
Investigate Police Misconduct	3.6	56%
Collect & dispose of recyclable items	3.5	57%
Customer Service Center	3.5	54%
Discovery Place	3.5	54%
Operate animal shelter	3.5	52%
Animal cruelty	3.5	50%
Urban Forestry	3.4	50%
Maintain landscaping	3.4	48%
Nature Museum	3.4	47%
Collect & dispose of non-recyclable metal items	3.3	48%
Event information to media	3.3	45%
Clean Tryon Mall	3.3	45%
Notify public of City meetings	3.3	44%
Enforce Fair Housing Ordinance	3.3	44%
Operate cemeteries	3.3	43%
Cleaning for Uptown events	3.2	41%
Rescue injured animals	3.2	41%
License animals	3.2	41%
Pick-up & destroy unwanted/stray animals	3.2	41%
Investigate employment discrimination	3.2	40%
Historic Districts	3.2	40%
Performing Arts Center	3.2	40%
Mint Museum	3.2	39%
Mediate cases to free up court system	3.2	39%
Sweep City streets	3.2	38%
Centralina Council of Governments	3.2	34%
Contract for spay-neuter services	3.1	35%
Sister Cities	3.1	33%
Arts & Science Council	3.1	33%
Afro Am. Cultural Ctr.	3.1	32%
Collect garbage daily from Uptown businesses	3.0	36%
Pet adoption services	3.0	32%
Animal lost & found	3.0	31%
Government services information	3.0	31%
Staff & equipment for City meetings	3.0	28%
Coordinate events	3.0	27%
Operate the Government Channel	2.7	22%
Art for City buildings	2.4	18%
Pressure-wash Tryon Mall sidewalks nightly	2.5	17%

Emergency Management

Emergency Management has the highest aggregated mean rating (highest budget priority) of the twelve service areas. Three specific programs comprise the Emergency Management service area: natural disaster planning, response to hazardous materials incidents, and the nuclear emergency response program. Each of these programs was rated above the midpoint on the scale with the majority of respondents giving each a high or very high budget priority (See Table 4).

Table 4

	Mean Rating	% Rating High or Very High
Natural disaster planning and response	4.0	78%
Training & response to hazardous materials incidents	3.9	72%
Nuclear power station emergency response program	3.7	62%

Funding to Community Agencies

This service area is ranked second overall. Of the programs included in this service area, United Family Services and Stop the Killing have the highest mean ratings (See Table 5). These programs are given a high budget priority by more than two-thirds of respondents. The Centralina Council of Governments and the Sister Cities programs get the lowest ratings with only about a third giving either a high budget priority.

Table 5

	Mean Rating	% Rating High or Very High
United Family Services	3.9	69%
Children's Services Network	3.8	68%
Stop the Killing	3.9	65%
Youth Involvement Council	3.7	62%
Carolinas Partnership	3.6	57%
Centralina Council of Governments	3.2	34%
Sister Cities Program	3.1	33%

Customer Service Center

Respondents were asked how high a budget priority it should be for the City of Charlotte to operate a Customer Service Center to provide a single place for citizens to get information, request service and register complaints. The average rating for this is 3.5 on the scale where 1 means not a budget priority and 5 means a very high budget priority. Fifty-four percent of respondents give it a high or very high rating.

Collection of Miscellaneous Items

Collection of Miscellaneous Items is provided by Solid Waste Services. The programs in this service area are all rated above the midpoint of the rating scale. As shown in Table 6 collecting and disposing of dead animals is the highest priority in this area with an average rating of 3.7 on the 5 point scale, and 62% of respondents giving it one of the top two ratings on the scale.

Table 6

	Mean Rating	% Rating High or Very High
Collect and dispose of dead animals	3.7	62%
Collect & dispose of large recyclable metal items	3.5	57%
Collect & dispose of large non-recyclable bulky items	3.3	48%

Community Relations

The highest priority program for Community Relations is police and neighborhood dialogues about crime prevention and City services with an average rating of 3.9. This is among the highest program ratings in the study. Table 7 gives the average ratings for all the programs included in Community Relations along with the percent of respondents rating at the top of the scale.

Table 7

	Mean Rating	% Rating High or Very High
Police/neighborhood dialogues	3.9	74%
Allegations of Police Misconduct	3.6	56%
Fair Housing Ordinance	3.3	44%
Employment discrimination	3.2	40%
Landlord tenant disputes	3.2	39%

Landscape Maintenance

Of the programs included in the Landscape Maintenance service area, cutting brush and grass on City property and street rights-of-way has the highest mean rating at 3.6 with 59% giving one of the top two budget priority ratings. As Table 8 shows, less than half of study respondents consider planting and maintaining landscaping and operating City cemetaries budget priorities.

Table 8

	Mean Rating	% Rating High or Very High
Cut grass and brush on City property	3.6	59%
Plant & maintain landscaping on City property	3.4	48%
Operate & maintain City cemeteries	3.3	43%

Urban Forestry

Respondents were asked to rate how high a budget priority it should be for the City to plant and maintain trees on City property and along City street rights-of-way. Respondents give this an average rating of 3.4 on the scale with half (50%) of respondents saying it is a high or very high budget priority for the City.

Street Cleaning

Street Cleaning includes flushing dirty streets and sweeping all City streets on a regular schedule. Flushing dirty streets is a higher priority for respondents with a rating of 3.6 (63% rating high or very high) than sweeping streets with an average rating of 3.2 and just over one-third (3.8%) rating it as a high or very high budget priority (See Table 9).

Table 9

	Mean Rating	% Rating High or Very High
Flush dirty streets	3.6	63%
Sweep all City streets on a regular schedule	3.2	38%

Animal Control

Animal Control encompasses the largest number of programs among the service areas tested in this study. Table 10 lists the programs included in Animal Control and gives the mean rating and percent of respondents rating the program as a high or very high budget priority. The highest priority programs under Animal Control are picking up and destroying dangerous animals (3.9) and providing rabies control (3.8). The lowest priority ratings are given for providing pet adoption services (3.0) and providing animal lost and found services (3.0).

Table 10

	Mean Rating	% Rating High or Very High
Pick up and destroy dangerous animals	3.9	73%
Provide rabies control	3.8	72%
Operate an animal shelter	3.5	52%
Investigate complaints and reports of animal cruelty	3.5	51%
Pick up and destroy unwanted & stray animals	3.2	41%
Rescue injured animals	3.2	41%
License animals	3.2	40%
Contract for pet spay-neuter services	3.1	34%
Provide pet adoption services	3.0	32%
Provide animal lost and found service	3.0	31%

Funding to Cultural Agencies

Funding to Cultural Agencies is one of the three least important service areas evaluated in this study. With an aggregated average rating of 3.1, it is a medium priority service area for respondents. The highest priority program under Funding to Cultural Agencies is Discovery Place a mean rating of 3.5 and just over half (55%) of respondents giving it a high or very high budget priority rating (See Table 11). Next is the Nature Museum at 3.4. Art for New City Buildings receives the lowest rating of any specific program in this study at 2.4 on the 5 point scale. Only 18% of respondents give this program a high or very high budget priority rating.

Table 11

	Mean Rating	% Rating High or Very High
Discovery Place	3.5	55%
Nature Museum	3.4	47%
Performing Arts Center	3.2	40%
Mint Museum	3.2	39%
Historic Districts & Neighborhoods	3.2	39%
Afro American Cultural Center	3.1	33%
Arts & Science Council	3.1	33%
Art for new City buildings	2.4	18%

Public Information

Less than half of the respondents rate the Public Information programs as high or very high budget priorities. In fact, four of the nine lowest rated programs come from this service area. Table 12 shows the specific ratings of each Public Information program as well as the percent of respondents giving one of the top two ratings to each program.

Table 12

	Mean Rating	% Rating High or Very High
Provide information to news media	3.3	44%
Notify citizens of public meetings	3.3	43%
Produce and distribute Information about government services	3.0	31%
Provide staff & equipment for public meetings	3.0	28%
Coordinate events, news conferences, and other meetings	3.0	27%
Operate the Government Channel	2.7	22%

Maintain Central Business District

This service area has the lowest aggregated mean rating of any service area. Table 13 gives the average ratings of each program in this service area and the percent of respondents who think the individual programs are high or very high budget priorities for the City of Charlotte. Pressure washing Tryon Mall sidewalks nightly has the lowest percent of high or very high ratings in this study with a resulting average rating of 2.5.

Table 13

	Mean Rating	% Rating High or Very High
Clean the Tryon Street Mall area	3.3	45%
Provide cleaning for special events Uptown	3.2	41%
Collect garbage from Uptown businesses daily	3.0	37%
Pressure wash Tryon Street Mall sidewalks nightly	2.5	18%

CAPITAL PROJECTS

Importance of Capital Projects

Respondents place high importance on the Capital Projects tested in this study. The aggregated mean rating for Capital Projects is 3.8 on a scale where 1 means not at all important and 5 means essential. Chart 6 shows the percentage of respondents rating each type of capital project very important or essential.

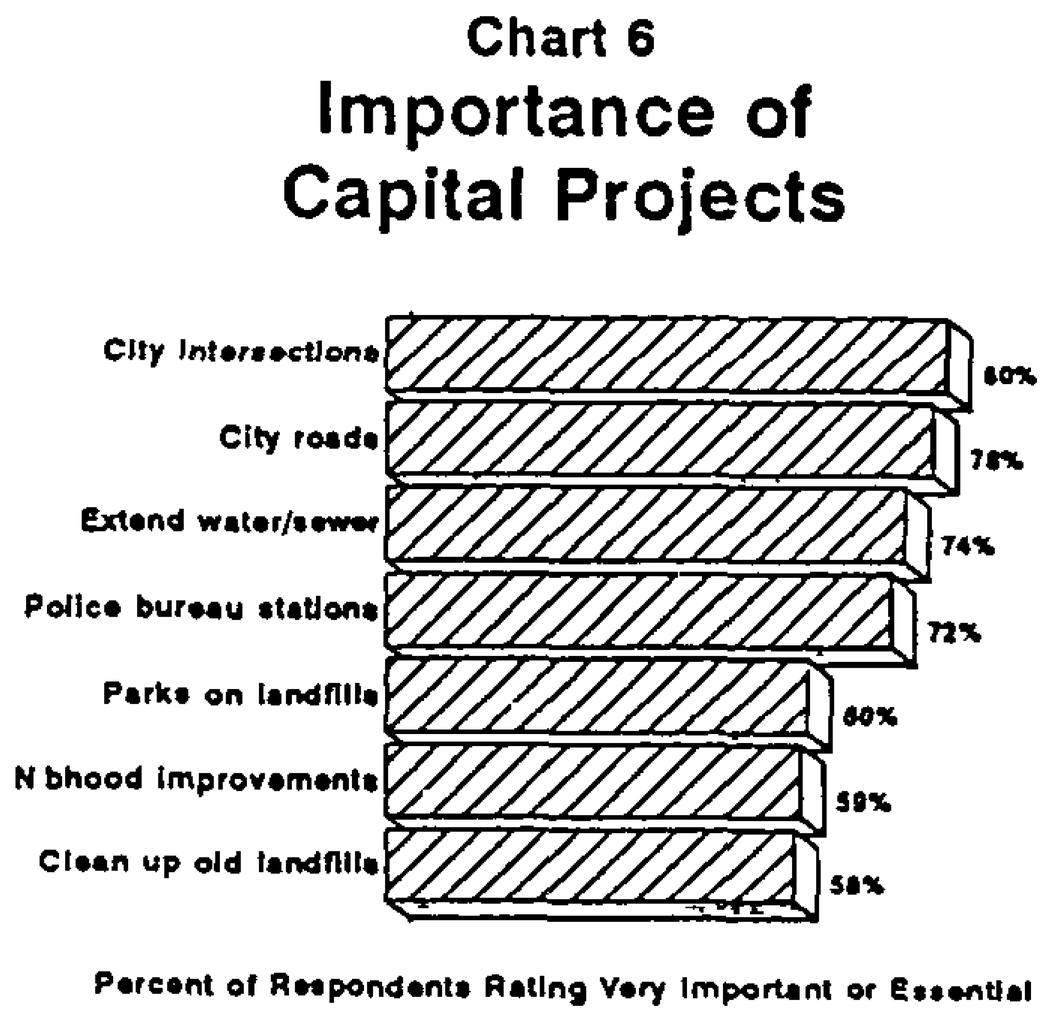

The majority of respondents rate all Capital Projects either very important or essential. Respondents put their highest priorities on infrastructure issues with the highest importance ratings going to improving busy intersections (80%), widening and constructing city roads (78%), extending water and sewer lines (74%), and locating police bureau stations in neighborhoods (72%). However, neighborhood improvements like curbs, gutters and sidewalks have just 59% of respondents rating them very important or essential.

Funding for Capital Projects

A modest increase in property taxes specifically to support Capital Projects has strong support among survey respondents. Sixty-five percent are willing to pay $10 more a year in taxes. When respondents were asked if they would pay $5 more per year in property taxes, another 8% responded positively. However, 27% of respondents are not willing to pay more taxes to fund Capital Projects.

Suggestions for getting funding for Capital Projects center around bonds and taxes. Eighteen percent of respondents say the City should issue bonds to pay for Capital Projects, and 35% say the City should raise taxes (property, sin, luxury taxes). Another 22% say the City should cut spending, and 12% of respondents suggest having fund raisers.

TRANSIT ADVISORY COMMITTEE'S RANKING OF FY 96-97 SERVICE IMPROVEMENTS

1	Uptown Circuit	• Began in January 1995 • Council approved contributing up to $50,000 toward first year demonstration cost of $170,000
2	Vanpool Expansion	• Number of vanpools will increase from 20 to 30, 10 new vans were recently delivered • Additional cost recovered through user fees
3	EZ Rider North	• Began in February 1994 • Will continue to monitor ridership against standard of 8 passengers/hour Service changes planned for June 5 • Annual cost is $160,000
4	Rock Hill CommuteRide	• Began third year of operation on March 1, 1995 • Council approved contributing up to $35,000 toward annual operating cost of $160,000 for year 3
5	EZ Rider West	• Began in February 1994 • Making service adjustments on June 5 to increase use to standard (8 passengers/hour) • Annual cost is $160,000
6	UNCC/University City Neighborhood Routes	• Recommended by Barton Aschman. • Possible joint venture with UNCC, University Research Park, and University City • City's contribution projected at $132,000 yearly toward overall annual cost of $225,000
7	EZ Rider Northwest	• Recommended by Barton Aschman • Serve CWAC area south of I-85, west of I-77, and east of Freedom • Estimated annual cost is $160,000, to begin in FY 97

(over)

TRANSIT ADVISORY COMMITTEE'S RANKING OF FY 96-97 SERVICE IMPROVEMENTS

8	Gastonia CommuteRide	• Recommended by Barton Aschman • City's contribution would be $50,000 toward annual operating expense of $160,000 • Balance of cost paid for through fares, State grant, and/or Gastonia funding • Implementation depends on Gastonia's interest and funding
9	Route 31-Southside Crosstown	• Began in January 1994. • Added to Charlotte Transit route structure as recommended by CTS management • Meeting service standard of 12 passengers/hour.
10.	Concord/Kannapolis CommuteRide	• Recommended by Barton Aschman • City's contribution would be $50,000 toward annual operating expense of $160,000. • Balance of cost paid for through fares, State grant, and/or Concord and Kannapolis funding • Implementation depends on Concord's or Kannapolis' interest/funding.
11	SouthPark Neighborhood Routes	• Recommended by Barton Aschman • Replaces outer ends of Route 19 Park Road and Route 20 Queens Road with small buses/vans operating in neighborhoods • Staff will study more in FY 96, possible implementation in FY 97
12	Route 35 - Blue and Green Loops	• Began in January 1994 • Will be terminated on June 5 • Route's productivity of 8 passengers/hour after 1 year's operation was well below standard of 12

VICTIM ASSISTANCE

HISTORY AND SERVICES

Counsels victims of crime and assists the victim and family members in working with police, court, and social service system as needed. Began in 1978 as a collaboration between United Family Services and the City of Charlotte. Provides a supportive service to police in working with victims.

STRUCTURE

A division of United Family Services, a private non-profit agency.

CURRENT FUNDING

City of Charlotte	$ 227,171
United Way	$ 103,116
Other grants	$ 69,165
Total Budget	$ 399,452

REQUEST TO CITY FOR FY96-$232,350
REQUEST TO CITY FOR FY97-$242,621

CLIENTS ELIGIBILITY

Residents of Mecklenburg County or persons who were victimized in this county

STAFF

8 professional fulltime and 1 part time
- Director
- 2 Felony Counselors
- 1 Rape Crisis Coordinator (Part time position)

- Misdemeanor Coordinator
- 4 Misdemeanor Counselors (primarily domestic violence)

2 Secretaries

VOLUNTEERS

39 Rape Crisis Companions
12 Victim Advocates
6 Homicide Volunteers

ACTIVITIES

Crisis intervention, professional counseling, support groups, information and referral, community education, 24 hour Rape Crisis hotline and hospital response, court accompaniment

CATEGORIES OF CRIME VICTIMS SERVED

Sexual assault, domestic violence, armed robbery, assault, families of homicide victims, child sexual abuse

CLIENTS SERVED

1994: 3,001

LARGEST CLIENT POPULATION

Victims of domestic violence and their children
129% increase in last five years:
1990: 955
1994: 2,195

SIGNIFICANT CHANGE IN PROGRAM

Passage of 50B Pro Se Domestic Violence legislation added assistance with civil court to program activities

1990 Assisted with 114 restraining orders
1994 Assisted with 848 restraining orders

IMPACT OF PRO SE PROTECTIVE ORDERS
- Many women and children are able to stay in their own home
- Children experience less disruption
- Staying in same neighborhood with families, schools, and friends
- Swift action taken by police if order is violated
- Fathers can still support children as they do not lose jobs as may happen in criminal cases
- 75% of domestice violence clients followed through with court process

May 23, 1995
AFM/ym

CITY COUNCIL COMMITTEES

May 1995

CITY WITHIN A CITY

Date: May 4, 1995
Present: Spencer, Cannon, Martin
Absent: Wheeler, Campbell
Time 3.30 - 5.05 pm

Annie Casey Foundation Grant Application - Update provided by Del Borgsdorf

Economic Development Loan Status Report - Update provided by Steve Washington

Neighborhood Reinvestment Status Report - Update provided by Richard Bargoil

Pending Assignments Next meeting scheduled June 26

COMMUNITY DEVELOPMENT AND HOUSING

Pending Assignments

COUNCIL-MANAGER RELATIONS

Pending Assignments

ECONOMIC DEVELOPMENT

Date: May 17, 1995

Present. Wheeler, Martin, McCrory, Spencer
Absent Majeed
Time· 3·30 - 5 25 pm

Briefing on Consultant Study of Building Permit Process - Motion carried unanimously to accept the KPMG Peat Marwick draft report Staff will come back to the committee with an implementation process

Economic Development Loans Report - Committee received a report on the ED loan programs, their purposes, eligibility criteria, and review/approval process. Staff will prepare recommendation for consideration at next meeting

Pending Assignments Staff Recommendations on ED Loans (to be set)

INTERGOVERNMENTAL RELATIONS

Pending Assignments Asset Forfeiture Funds (June 15)

PERSONNEL & FINANCE

Date May 1, 1995
Present Martin, Campbell, Baker, Cannon
Absent. Wheeler
Time: 3 30 - 5 00 pm

Business Privilege License Fees - Greg Gaskins provided information on pending legislation, addition information requested on tax figures for large and small businesses

Cable TV Public Access Corporation - Motion carried unanimously in approval of exploring options in-house, school system, etc

Human Resources Philosophy - Motion carried unanimously in approval of addition of 'Commitment to Competition' to Human Resources philosophy.

Pending Assignments Follow-up to May 1 meeting to be scheduled

---

PLANNING

Date: May 31, 1995
Present: Majeed, Spencer, Baker, Scarborough
Absent: Campbell
Time. 3.30 - 5 15 pm

Notification Process for Locating Institutional Facilities - Committee provided input into specific institutional and other land uses to be addressed. Staff will report back to committee after refining list

New Urbanism Development Concepts - Committee received a report from Stanley Watkins Staff will provide additional information an June 28 meeting

Pending Assignments: Follow-up meeting set for June 28

PUBLIC SAFETY

Pending Assignments Presentation by Parole Accountability Committee, and False Alarm Ordinance

---

PUBLIC SERVICES

Date May 15, 1995
Present· Reid, Baker
Absent. Scarborough, Jackson, Majeed
Time 3 30 - 4 25 pm

Drug-Free Workplace for City Contractors - Although a quorum was not present, the committee reviewed legal issues and policy considerations A follow-up meeting to be scheduled after staff researches what other major employers are doing relative to this issue

Pending Assignments· Drug-Free Workplace for City Contractors Follow-Up, and Citizen Surveys/Benchmarking with Other Cities

---

TRANSPORTATION

Date May 25, 1995
Present Campbell, Wheeler, Jackson, Martin, Spencer
Absent. None
Time. 3 30 - 4:40 pm

Barclay Downs Neighborhood Concerns - Motion carried unanimously (4-0, Martin left prior to vote) in approval of staff review of recommendation from the Barclay Downs Traffic Committee Additionally, staff will report back to the committee on the feasibility of a signal for Colony at Roxborough.

Pending Assignments· Follow-up meeting(s) to be scheduled on Barclay Downs Neighborhood Concerns and Bus Shelter Advertising Implementation.

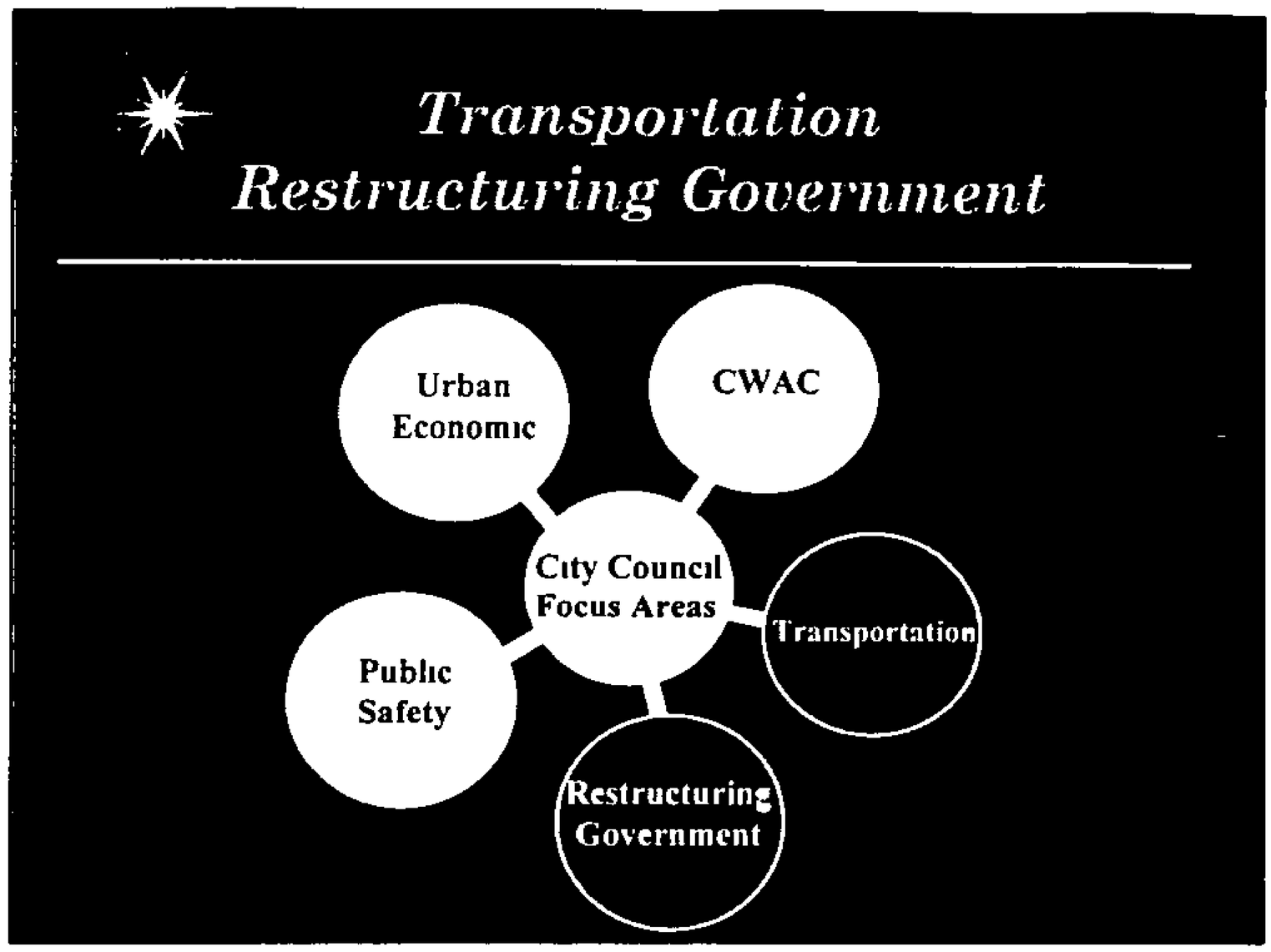
Transportation
Restructuring Government
Urban Economic
CWAC
City Council Focus Areas
Transportation
Public Safety
Restructuring Government

Notes:

Transportation
Mission

- Citizens and businesses move easily and safely
- Effective regional, national and international connections
- Access to market, employment, etc. opportunities
- Neighborhood and environmental protection

Notes:

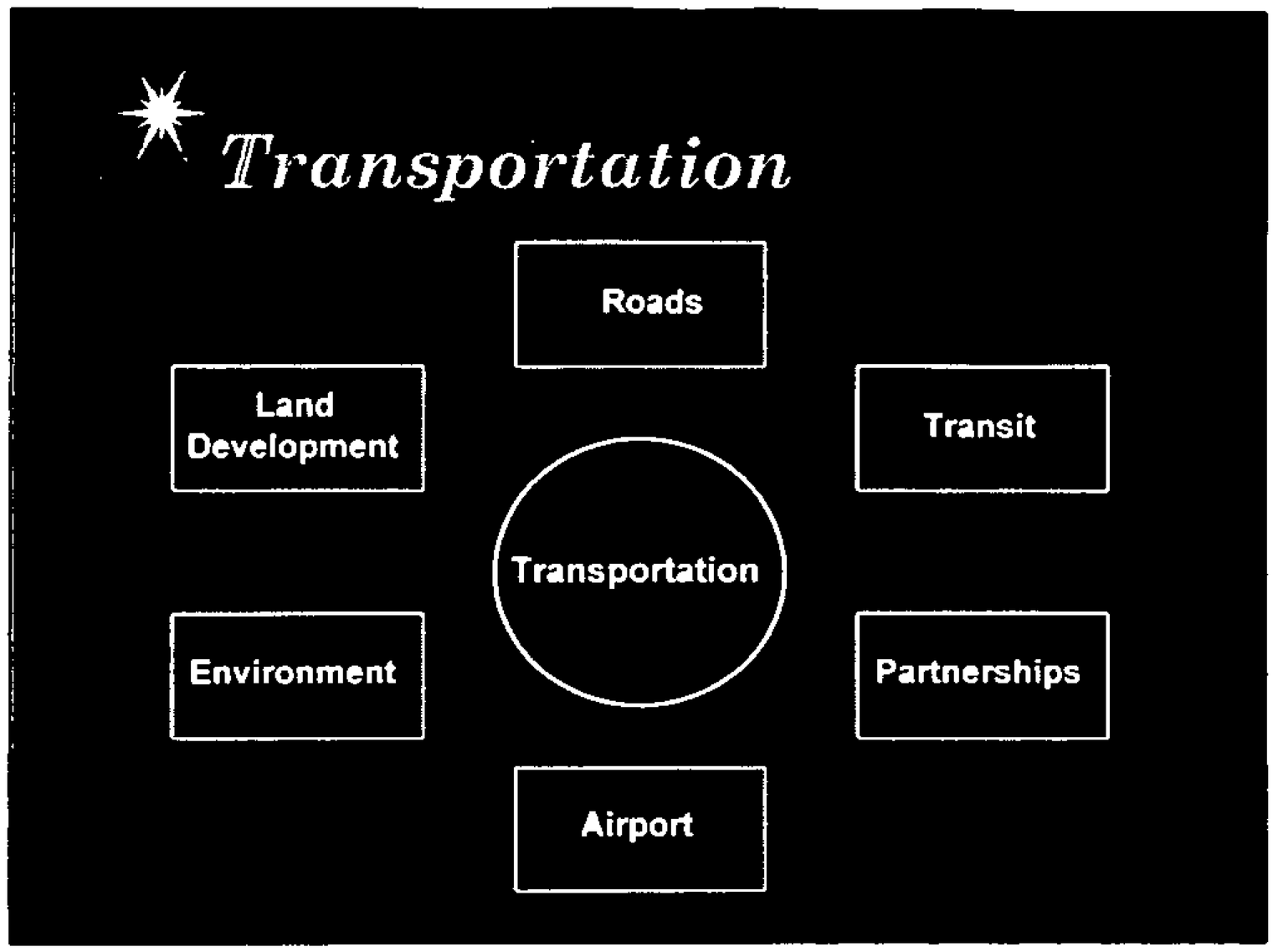
Transportation
Roads
Land Development
Transit
Transportation
Environment
Partnerships
Airport

Notes:

Transportation

Roads

- Examine ways to maximize capacity of existing street system
- Improve City streets and intersections
- Work with NCDOT to increase amount of State allocated road funds

Notes:

Transportation

Budget Highlights

Roads - Spend savings from 1988 Street Bonds:

- $12 million for roads and intersections
- $ 5 million for sidewalks
- $ 2 million for Business Corridors

Notes:

Transportation

Budget Highlights

Roads - Identify new funding source for City street/intersection construction beyond 1998:

- $13 million needed to complete 6 intersection/road projects which will be designed with 1988 Street Bonds
- City's unfunded local roadway needs for 2015 estimated at $132 million

Notes:

Transportation

Transit

- Open new Charlotte Transportation Center ($347,000)
- Continue EZ Rider North & West ($325,000)
- Expand STS 25% in both fiscal years to comply with ADA (Year 1: $230,000/ Year 2: $697,000)

Notes:

Transportation

Transit

- Add more vanpools ($37,000)
- Innovative transportation strategies being developed by CDOT & Neighborhood Development

Transportation

Budget Highlights

Transit - Identify additional funding for public transit:

- Raise transit fares by 25% in FY96
- $6 million balance gets City through FY98
- Fund deficit could reach $4.7 million by 2000 assuming current operations

Notes:

Transportation

Partnerships

- Begin Northeast Mecklenburg transit services in cooperation with UNCC, University Research Park, etc. ($225,000)
- Operate regional bus services working with ring cities, State DOT's, UTC, etc. ($320,000)
- Continue metro cooperation begun during the "Committee of 100" efforts

Notes:

Transportation

Environment

- Accelerate sidewalk program ($5 million)
- Continue electric vehicle demonstration with Duke Power ($50,000)
- Install computerized traffic signals along 8 more arterial streets ($100,000)

Notes:

Transportation

Land Development

- Complete 2015 Land Use Issues Report (*5 Person-Months*)
- Update District Plans (*10 Person-Months*)
- Complete transit corridor planning - Airport, Matthews and Pineville (*6 Person-Months*)
- Complete U. S. 29 Corridor study (*1 Person-Month*)

Notes:

Transportation

Airport

- Prepare an Airport Master Plan Update ($750,000)
- Conduct Environmental Impact Statement for 3rd parallel runway ($750,000)
- Air cargo expansion ($25.8 million over 5 years)

Notes:

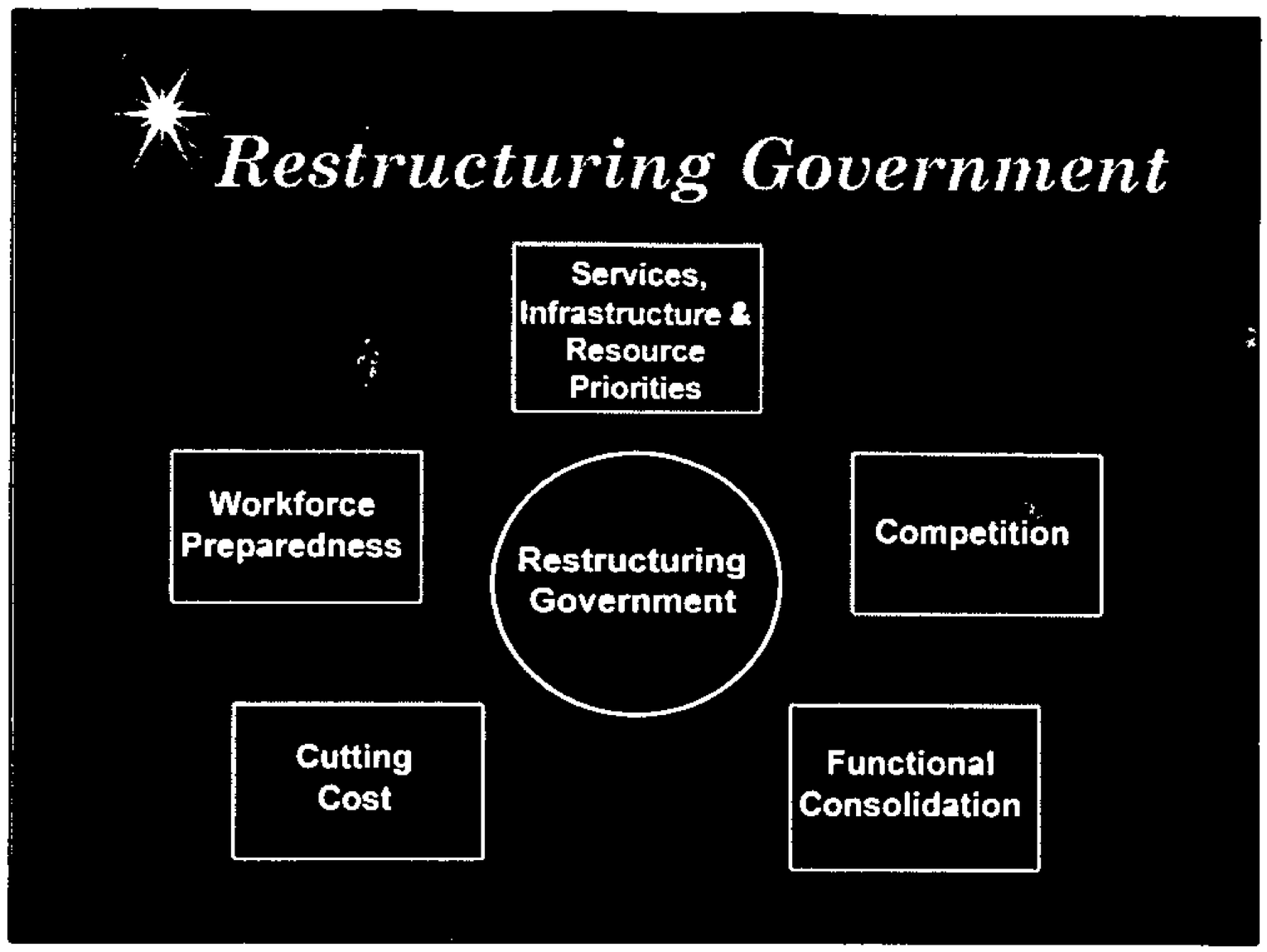
Restructuring Government
Services, Infrastructure & Resource Priorities
Workforce Preparedness
Restructuring Government
Competition
Cutting Cost
Functional Consolidation

Notes:

Restructuring Government

Cutting Costs

FY1996-97 Budget:

- 141 Positions Eliminated in FY96 (Saved $4.6 million)
- 10 of 15 General Fund departmental budgets lower in FY96 than in FY95
- 683 Eliminated Positions Since FY92 (Save $22.5 Million Annually)

Notes:

Restructuring Government

Cutting Costs

On-Going Strategies:

- Improve the land development / regulatory permitting processes
- Develop employee incentives for cost cutting: gainsharing; suggestion awards system

Notes:

Restructuring Government

Cutting Costs

On-Going Strategies: *(Continued)*

- Cost Cutting Focus Groups in Police and Fire
- Identify ways to improve productivity through reduced overtime and absenteeism, and contract labor

Notes:

Restructuring Government

Functional Consolidation

FY96-FY97 Budget:

- Mainframe computer operations (effective July 1, 1995)
- Fleet Maintenance and engineering map room under negotiations

Notes:

Restructuring Government

Functional Consolidation

On-Going Strategies:

- Continue to pursue functional consolidation with Mecklenburg County

Notes:

Restructuring Government

Workforce Preparedness

FY96 - FY97 Budget:

- Amend Human Resources philosophy
  - Commitment to Competition
  - Marketability of Employees
  - Training and Retraining
- FY96 Pay and Benefits Recommendations

Notes:

Restructuring Government

Workforce Preparedness

FY96 Pay Recommendations:

- Broadbanding
  - 4% total increase budgets for KBU's (Cost: $1.8 million)
    - 3.7% merit increase budget
    - 0.3% career development budget
  - 3% increase in the broadbanding minimum/maximum rates

Notes:

Restructuring Government

Workforce Preparedness

FY96 Pay Recommendations: *(Continued)*

- Public Safety

  3% increase in all steps in the Public Safety Pay Plan (Cost: $3.7 million)

- Longevity

  Freeze longevity pay at December, 1995 dollar amount (Save: $500,000 over 5 years)

Notes:

Restructuring Government

Workforce Preparedness

FY96 Benefits Recommendations:

- **NO INCREASE** in health insurance premiums
- Small increase in Dental Insurance Rates
- Increase "stop loss" insurance (Save: $200,000)
- Discontinue life insurance for employees disabled and discontinue working after July 1, 1995

Notes:

Restructuring Government
Workforce Preparedness

FY96 Benefits Recommendations:

- NO INCREASE in health insurance premiums
- Small increase in Dental Insurance Rates
- Increase "stop loss" insurance (Save: $200,000)
- Discontinue life insurance for employees disabled and discontinue working after July 1, 1995

Notes:

Restructuring Government

Workforce Preparedness

On-Going Strategies:

- Determine feasibility of an early retirement incentive program
- Determine feasibility of differentiated benefits program
- Link every employee to respective department's business plan

Notes:

Restructuring Government
Competition

FY96-FY97 Budget:

- 119 Services candidates for competition / outsourcing (Value: $3.5 million)
- Privatization of Residential Garbage Collection for 1/4 of City
- Services outsourced account for 69 positions eliminated

Dave said the figure should be $35 Million not $3.5 Million

Notes:

Restructuring Government

Competition

FY96-FY97 Budget: *(Continued)*

- Dedication of Asset Sales to Capital Program
- Competition savings transferred to competition/privatization fund in operating budget ($100,000)

Notes:

Restructuring Government

Competition

On-Going Strategies:

- Key Business Competition Plans
- Asset Management

Notes:

Restructuring Government

Service, Infrastructure & Resource Priorities

FY1996-97 Budget:

- No tax increase
- Partners Assessment
  - Partners held flat in FY96
  - Partners reduced 10% in FY97
  - ACCC Authority excess profits
  - Housing: Compete in FY97

Notes:

Restructuring Government

Service, Infrastructure & Resource Priorities

FY1996-97 Budget: *(Continued)*

- Transfer 1/4 cent to Capital to fund Environmental bonds ($720,000)
- Services Assessment completed

Notes:

Restructuring Government

Service, Infrastructure & Resource Priorities

On-Going Strategies:

- Community Infrastructure Review
  - Process in FY96
  - Funding strategy for FY97
- Review financial policies
  - Transit Fund dedication
  - Stormwater Property Tax

Notes:

Restructuring Government

Service, Infrastructure & Resource Priorities

On-Going Strategies: *(Continued)*

- Review financial policies
  - Powell Bill Use
  - Cemetery Trust Fund
- Fund / invest in reengineering tools

Notes:

Transportation Restructuring Government

Questions & Answers

Notes:

VACANCIES AS OF 5-31-95

	VACANT	TO BE DELETED	NET FUNDED VACANCIES
POLICE	116 50	3 00	113 50
FIRE	6 00	0 00	6 00
SOLID WASTE SERVICES	18 00	49 00	(31 00)
TRANSPORTATION	39 75	21 00	18 75
NEIGHBORHOOD DEVELOPMENT	1 25	5 25	(4 00)
ENGINEERING AND PROPERTY MANAGEMENT	40 00	20 00	20 00
PLANNING	4 00	2 00	2 00
WATER AND SEWER	123 00	11 00	112 00
AVIATION	24 00	0 00	24 00
MAYOR AND COUNCIL	0 00	0 00	0 00
CITY ATTORNEY	2 00	0 00	2 00
CITY CLERK	0 00	0 00	0 00
CITY MANAGER	1 00	0 00	1 00
HUMAN RESOURCES	1 50	1 50	0 00
BUSINESS SUPPORT SERVICES	23 00	18 50	4 50
FINANCE	15 00	9 00	6 00
BUDGET AND EVALUATION	1 00	1 00	0 00
	416 00	141 25	274 75

FOOTNOTES

1 Some vacancies are being held to perform the work with temporaries pending competition

2 A vacancy rate has been budgeted in Police, Transportation, and Engineering based on historic vacancy trends

3 Four of the Neighborhood Development and 31 of the Solid Waste Services eliminated positions are currently filled

CITY OF CHARLOTTE

COLLECTION PROCUREMENT SCHEDULE

UPDATED MAY 17, 1995

RFP, Issuance, Bid Opening and Award	
Issue RFP to Short-Listed Vendors	*April 26*
Preproposal Conference	*May 4*
Issue Conference Report and Addenda If Required	*May 12 - 17*
Bid Opening	*May 26*
Evaluation/Confirmation of Bids Clarification If Necessary	*May 29-June 14*
Decision by P/CAC on Award Recommendations	June 15
Submit Recommendation to City Council	*June 20*
City Council Decision on Bid Award	June 26
Negotiations and Notice to Proceed	*August 1*
Estimated Start Date	September 30

Notes

1 P/CAC refers to the Competition/Privatization Advisory Committee

2 Schedule assumes that decisions called for at meetings on the schedule are reached and finalized at the time of the meeting. Additional data collection or discussion may result in delay of key deadlines

3 *Italicized tasks are those delegated to the City/Consultant team*

Solid Waste Services Cost Comparison

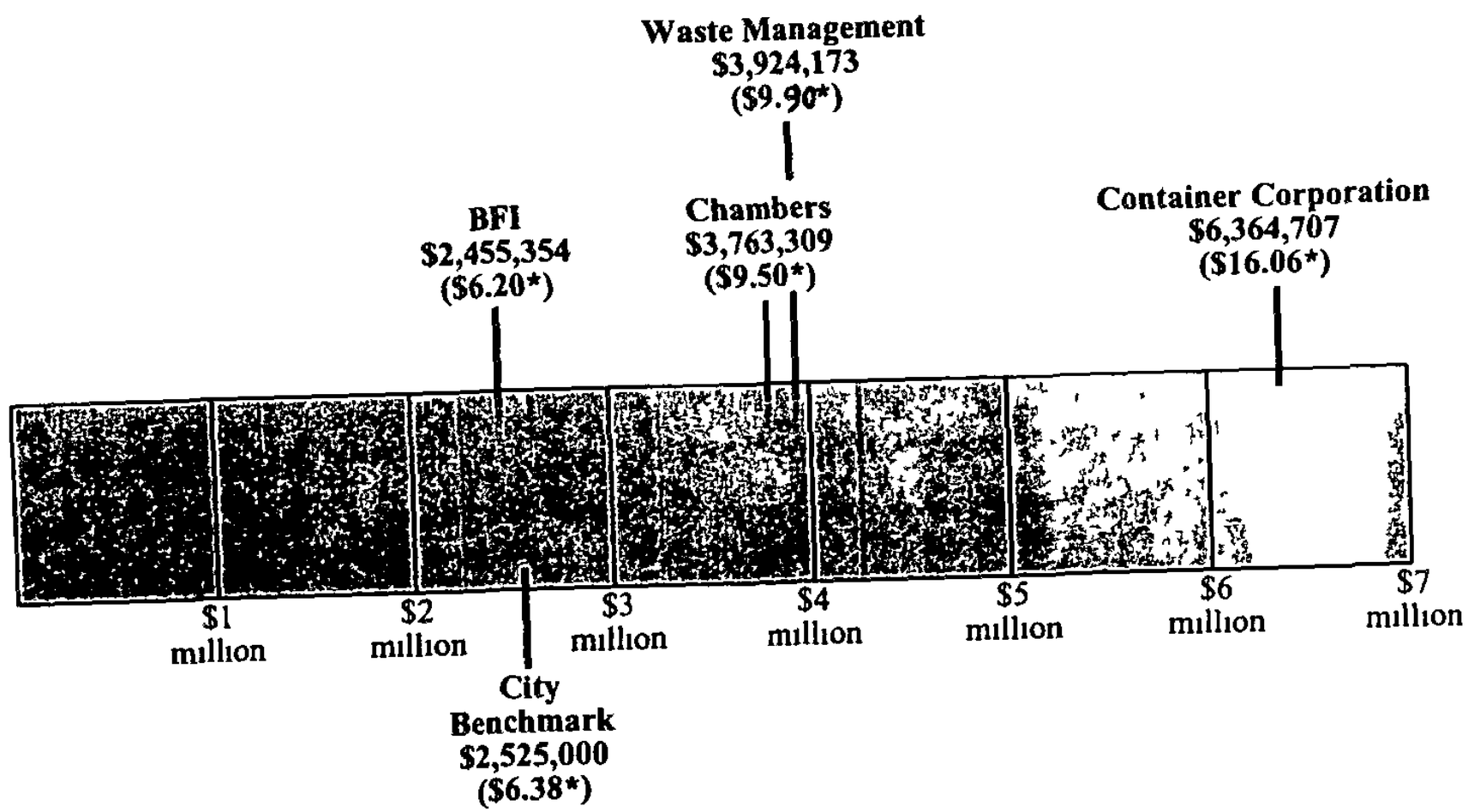

*Cost per household based on 33,022 households

SOLID WASTE SERVICES

CITY COST BENCHMARK

Business Decision: What are our costs (now and over the next five years) to provide solid waste services to 33,000 households.

Labor Costs Costs reflect drivers, crews and supervisors to serve 33,000 households

Salaries and fringe benefits (retirement, health insurance, social security,)
Overtime pay and holiday pay
Workers Compensation

Equipment Costs Costs reflect number of trucks to serve 33,000 households

Maintenance costs
Depreciation
Interest expense on financing
Vehicle Liability

Other Costs.

Fuel
Uniforms
Maintenance on radio equipment
Other small tools and equipment

The attached is the FY96 and FY97 detailed budget for Solid Waste Services. This information can now be inserted in your program budget notebooks and replaces the same numbered pages that contained only bottom line information.

Budget Summary

Program	*FY95 Budget*	*FY96 Recommended*	*FY97 Proposed*
Residential Rollout Garbage Collection	$5,383,573	$2,976,850	$2,832,806
Residential Recyclables Collection	3,311,757	2,788,020	2,869,164
Residential Yard Waste Collection	3,043,197	2,355,713	2,245,592
Bulky Items & Used Tire Collection	799,052	969,208	962,185
Contracted Residential Garbage and Recyclables Collection	2,313,953	2,314,664	2,338,898
Commercial Trash Collection	370,632	512,656	507,200
Solid Waste Tonnage & Costs	129,276	118,401	502,827
Street Cleaning	1,587,015	1,669,680	1,709,610
Central Business District Maintenance	508,458	522,464	529,911
Tryon Street Mall Decorative Lights	0	71,120	71,120
Litter Ordinance	395,480	427,426	436,243
Abandoned Vehicles Ordinance	436,691	181,917	182,969
City Within A City	0	509,329	518,666
Collection Contract Administration	0	2,588,284	3,332,129
Department Operations	0	71,763	73,770
Sub-total	$18,279,084	$18,077,495	$19,113,090
Off-setting Revenues	(105,297)	(127,587)	(127,587)
Total General Fund Cost	$18,173,787	$17,949,908	$18,985,503
Positions	299 00	250 00	250 00

Services Provided	*FY96 Positions*	*FY96 Recommended*	*FY97 Proposed*
Residential Rollout Garbage Collection Provides weekly rollout garbage collection service to approximately 75% of residential units	52 00	$2,976,850	$2 832 806
Residential Recyclables collection Provides weekly curbside recyclables collection service to approximately 75% of residential units and contracted collection service to the towns of Cornelius and Davidson	49 00	2,788,020	2,896 164
Residential Yard Waste Collection Provides weekly yard waste collection service to approximately 75% of residential units	40 50	2,355,713	2,245 592
Bulky Items and Used Tire Collection Provides scheduled collection service of furniture, appliances, other bulky trash items and used tires to all single and multiple residential units within approximately 75% of the City limits Collects used tires which are dumped illegally on street rights-of-way	21 75	969,208	962 185
Contracted Residential Garbage and Recyclables Collection Administers contracts with private haulers for the collection of garbage and recyclables from multi-family complexes with dumpster service to approximately 25% of residential units in the City	1 00	2,314,664	2,338,898
Commercial Trash Collection Provides weekly trash collection service to small businesses and public trash receptacles within the City limits	9 50	512,656	507,200
Solid Waste Tonnage and Costs Administers contracts and maintains records on solid waste disposal tonnage and costs	0 50	118,401	502,827
Street Cleaning Provides sweeping, debris removal and weed control service on major thoroughfares and cut-through streets, dead animal collection, debris removal from community cleanups, and 24 hour emergency removal of debris causing traffic hazards	37 50	1,669,680	1,709,610
Central Business District Maintenance Provides cleaning and maintenance services in the Tryon Street Mall area and support for special events in the Central Business District	10 75	522,464	529,911
Tryon Street Mall Decorative Lights Administers contracts for decorative lighting on the Tryon Street Mall trees	0	71,120	71 120
Litter Ordinance Enforces the City Code requiring the removal of weeds, grass, trash, illegal signs and junk	8 50	427,426	436,243

Services Provided	FY96 Positions	FY96 Recommended	FY97 Proposed
Abandoned Vehicles Ordinance Enforces the City Code requiring the removal of abandoned hazardous/junk vehicles from private property	3 75	$181,917	$182 969
City Within A City Provides special education, clean-ups and other innovative partnership programs which enhance the quality of life in the City Within A City Action Plan neighborhoods	9 50	509,329	518 666
Collection Contract Administration Administers contract for solid waste residential collection service from rollout carts Deliver rollout carts in the "contract" area	4 50	2,588,284	3,332 129
Department Operations Develops and maintains a business plan and operating strategy, an activity based costing/management system, a budget and evaluation system, a personnel evaluation process, data management systems, inventory, training and customer service strategies	1 25	71,763	73 770
Sub-total Solid Waste Services	250.00	$18,077,495	$19,113,090
Off-setting Revenues		(127,587)	(127,587)
Total Solid Waste Services Costs		$17,949,908	$18,985,503

Transportation

Vision

- A Key Business which is.
  - responsive to the needs and desires of Charlotte's citizens;
  - devoted to the improvement of the quality of life in the community;
  - exemplary in its operation, management and professionalism.

Mission

- To provide the transportation needed for mobility in an urban center in a rapidly growing urban region:
  - an efficient, effective, safe and interrelated transportation system, including roads, transit and related facilities and services, which also serves other goals of the urban area and contributes to the quality of life.

Fast Facts

- Since 1979, street mileage maintained has increased 51% , from 1,117 miles to 1,689 miles During that same period the number of employees to perform the maintenance has decreased from 260 to 242.
- Between 1985 and 1995, signalized intersections operated and maintained increased from 371 to 524, a 41% increase
- During FY94, Charlotte citizens boarded Charlotte Transit buses over 12,000,000 times. Over 7,000,000 of these boardings were made by citizens with no driver's license or no automobile available
- The ratio of farebox revenue to cost of operation is 39 % for Charlotte Transit through the first nine months of Fiscal Year 1995 - ranking in the top 25% of comparable systems nationally

FY 96 PAY AND BENEFITS RECOMMENDATIONS
Executive Summary

PAY RECOMMENDATIONS

Broadbanding Pay System

- Recommend 4% total increase budgets for Key Business Units
  - 3 7% merit increase budget
  - 0 3% career development increase budget
- Continue FY95 Merit Increase Guidelines

  Merit increases range from 0% to 8% based on market position and performance level but must average no more than 3 7% in the Business Unit
- Recommend 3% increase in the broadbanding structure's minimum/maximum rates

Public Safety Pay Plan

- Recommend 3% increase in all steps in the Public Safety Pay Plan for uniformed Police and Fire employees

Longevity Pay

- Recommend freezing the longevity pay program for employees hired prior to July 1983 at the December 1995 dollar payout amount to increase the City's ability to be competitive in the long term

BENEFITS RECOMMENDATIONS

- Recommend no change to medical insurance premiums for employees and retirees
- Recommend dental insurance premiums be increased by 10 2%
- Recommend changes to individual stop loss coverage for medical plan
- Recommend change to continuation of life insurance coverage for employees who become disabled

FY96 PAY RECOMMENDATIONS

The FY96 pay recommendations are based on local, regional and national compensation trend data and on extensive market data on individual job classes This market data includes information from the Human Resources Department's annual surveys of national and regional municipalities, as well as Charlotte area organizations In addition, special surveys of large national airports, water-sewer utilities and crime laboratories were also conducted by Human Resources staff

In addition, extensive market information was collected from national compensation consulting firms, including Wyatt/ECS, William M Mercer, Inc , Towers Perrin, and Ernst and Young and others, as well as from surveys conducted by professional organizations and other employers

Market data was gathered on 93% of all City jobs and 99% of all City employees This data indicates that, for positions in the Broadbanding Pay System, the City's relative market position is 95 4% based on data which has been aged to January 1996 consistent with our lead/lag policy

Review of national and regional compensation trends and projections indicates that merit budgets for 1995 will average 4 2% Local employers responding to the Human Resources Department's annual survey reported merit budgets averaging 3 9%

Broadbanding Pay System

Based on compensation trend data and market data on individual job classes, it is recommended that a 4% total increase budget for positions in the Broadbanding Pay System be approved for FY96 This will provide a 3 7% merit budget and 0 3% career development budget The career development budget will be used for promotions, to recognize increased job responsibilities and acquisition of additional skills, and to make equity or market adjustments In FY94 and FY95, 1% of salary budgets was allocated for career development This amount allowed business units to make compensation adjustments to reflect changed organizational structures and job changes The 1% amount is no longer needed and is being reduced to the recommended 0 3% allocation

The average merit increase of 3 7% recommended for City employees approximates that projected by our competitors and will allow the City to maintain its competitive position and continue to attract and retain a qualified, productive workforce

Based on a review of market data, relative position of employees in our band structure, and average range structure adjustments being made by other employers, it is recommended that the current band minimum and maximum rates in the Broadbanding pay structure approved for FY94 be adjusted by 3% These rates were not adjusted for FY95 This increase represents only a structural change and will have no direct impact on employee increases

Merit Increase Guidelines

It is recommended that we continue to use the Merit Increase Guidelines (see Guideline chart on page 12 of this report) approved for FY95 as a general framework for making pay decisions These guidelines include sufficient flexibility to allow departments to reward employees appropriately to their level of contribution, while keeping competitive in the market

As indicated by the recommended FY96 Merit Guidelines, Key Business Executives may grant merit increases of 0% to 8%, but will be held accountable for ensuring that average merit increases do not exceed 3 7% Pay decisions will be based on an employee's level of performance and on comparison of current salary to the market rate for their specific job

Public Safety Pay Plan

It is recommended that our Public Safety Pay Plan structure be adjusted by 3% based on projected structure movement for police and fire employees in other cities surveyed and other economic indicators. It is also recommended that 3 steps be added below the current minimum rate for Firefighter II to reduce the size of promotional increases from the Firefighter I class With this change, promotional increases into the Firefighter II class will not exceed 5%

Longevity Pay

Employees hired prior to July 1983 are eligible for longevity payments of 1-4% based on length of service While no new employees can become eligible, the cost of this program for those already eligible is increasing and is anticipated to grow by $500,000 over the next five years The increasing costs to maintain the current program will increasingly affect our ability to be competitive in the long term

To eliminate the program, however, would reduce the annual income of the 1600 employees now eligible and create significant morale problems among these our most senior employees Instead, it is recommended that the program be frozen at the December, 1995 dollar payout amount for each employee This will result in an immediate stop to the escalating costs but will not result in a pay decrease for any employee In addition, the costs will begin to decrease as employees retire or terminate, which will assist us in our competition effort Also, it is recommended that no otherwise eligible employee receive longevity unless their performance for the entire year preceding the payment date is at the "Meets Basic" or higher performance level and that the policy of providing a pro-rata share of longevity to the beneficiaries of eligible employees who die while in service be discontinued

Attachments

The following attachments which are provided at the end of this report support the pay recommendations

Attachment A - **Projected 1995 Market Movement**
An overview of 1995 compensation trend data from major national compensation consulting firms, as well as information on the Consumer Price Index

Attachment B - **Merit and Total Salary Increase Budgets Charlotte Area Companies**
A listing of data from 19 local companies which indicates that they are planning for merit increases averaging 3 9%

Attachment C - **Response Results of 1995 Employee Compensation Market Survey**
Response results of 1995 surveys conducted by the City of Charlotte Human Resources Department

Attachment D - **Market Position and FY96 Pay Recommendations**
Relative market position of the City of Charlotte in comparison to all market data collected and summary of the major FY96 pay recommendations

Attachment E - **FY96 Merit Increase Guidelines**
A guidechart for merit increases based on the employee's relative market position and performance level

FY96 BENEFITS RECOMMENDATIONS

RECOMMENDED MEDICAL INSURANCE PREMIUMS

Based on an actuarial review of our FY95 claims experience and anticipated trends for FY96, it is recommended that there be **no change** to medical insurance premiums for employees or retirees FY95 experience has been positive due to high participation within the managed care network by both employees and retirees, a relatively low number of high cost claims, and medical inflation being lower than expected

Consistent with previous actions by the City Council, the medical insurance premium structure for retirees will be reviewed in FY96

RECOMMENDED CHANGES TO INDIVIDUAL STOP LOSS COVERAGE FOR MEDICAL PLAN

The City self funds its medical insurance plan but purchases stop loss insurance for claims which exceed $150,000 for an individual in a calendar year This covers all employees and retirees, including retirees eligible for Medicare

Based on an actuarial review and recommendations from an insurance consultant, it is recommended that the stop loss insurance level be increased to $200,000 This will result in premiums being reduced by approximately $200,000, however, some of the savings could be offset if there were claims in the range of $150,000-$200,000

It is further recommended that individual stop loss coverage be eliminated for Medicare eligible retirees This is not a reduction in benefits for these retirees and the City should not realize any risk since Medicare is the primary coverage This will result in premiums being reduced by an additional $46,000

RECOMMENDED DENTAL INSURANCE PREMIUMS

The dental insurance program is offered to employees and their dependents It is not offered to retirees

Based on an actuarial review and recommendations from an insurance consultant, it is recommended that dental insurance rates be increased by 10 2% as shown in Attachment F on page 13 This will increase the City's cost for dental insurance cost by approximately $52,000

RECOMMENDED CHANGE TO CONTINUATION OF LIFE INSURANCE COVERAGE FOR EMPLOYEES WHO BECOME DISABLED

The City's group life insurance plan provides that coverage will be continued to age 70 or for life in the event that an employee becomes disabled prior to age 60 It is recommended that life insurance be discontinued upon date of separation of service for employees who become disabled on or after July 1, 1995 Employees could continue coverage through a policy which they could purchase at their own expense

This recommendation is based on the following

- While the City's current practice is comparable to that of other employers, the actuarial liability for this coverage has grown to approximately $2,000,000 and is expected to increase by $200,000 per year

- There is a need for consistency with how the group life insurance plan is administered for other employees who are not disabled (Under the life insurance plan, coverage ceases upon termination of employment, even for retirees)

This change should not affect our ability to recruit and retain qualified employees

ATTACHMENTS

FY96 Pay and Benefits Report

	Page
A. Projected 1995 Market Movement	8
B Merit and Total Salary Increase Budgets - Charlotte Area Companies	9
C Response Results of 1995 Employee Compensation Market Survey	10
D Market Position and FY96 Pay Recommendations	11
E FY96 Merit Increase Guidelines	12
F FY96 Monthly Dental Rates	13

Projected 1995 Market Movement

Type of Increase	Data Source	Scope	No. of Orgs.	Execs	Exempts	NonExempts
Total Increase	William M Mercer, Inc	U S	2900	4 3%	4 2%	4 1%
		Government	51	3 8%	3 8%	3 8%
		Southeast		4 3%	4 2%	4 1%
		N C		4 3%	4 1%	3 9%
		Charlotte		4 0%	3 9%	4 1%
	Towers Perrin	Southeast	298	4 2%	4 1%	4 0%
		Charlotte	33	4 2%	4 0%	3 9%
	Hewitt Associates	U S	1941	4 2%	4 1%	4 0%
		South	325	4 2%	4 1%	4 0%
Merit Budgets	William M Mercer, Inc	U S	2900	4 3%	4 2%	4 1%
	Towers Perrin	U S	1850	4 1%	4 0%	3 9%
		Government	23	2 9%	2 8%	2 8%
		Southeast	298	4 0%	3 9%	3 8%
		Charlotte	33	4 1%	3 9%	3 9%
	Hewitt Associates	U S	1941	4 1%	3 9%	3 9%
Structure	William M Mercer, Inc	U S	2900	3 1%	3 0%	2 9%
		Government		2 8%	2 7%	2 8%
	Towers Perrin	U S	1850	2 7%	2 7%	2 6%
	Hewitt Associates	U S	1941	2 9%	2 8%	2 7%

Consumer Price Index

Since 1985, pay increase budgets nationally have averaged 5 3%, the Consumer Price Index-Urban (CPI-U) during this ten year period has averaged 3 6%

CPI	U S	All Urban Consumers	2 9%
		Wage Earners	3 0%
	South	All Urban Consumers	3 1%
		Wage Earners	3 3%
	South 450-1 2M pop	All Urban Consumers	3 5%
		Wage Earners	3 6%

Attachment B

MERIT & TOTAL SALARY INCREASE BUDGETS
CHARLOTTE AREA COMPANIES
Charlotte Human Resources Department Survey
January 1995

	Merit Budget 1995	Total Increase Budget 1995
Company A	4 0%	4 0%
Company B		5 0%
Company C	3 5%	3 5%
Company D	4 0%	
Company E	4 5%	4 5%
Company F	5 0%	5 0%
Company G		3 0%
Company H	3 5%	4 0%
Company I	3 5%	3 5%
Company J		4 0%
Company K	5 5%	5 5%
Company L	3 5%	
Company M	4 0%	4 0%
Company N	5 6%	
Company O	4 0%	4 0%
Company P	4 0%	4 5%
Company Q	0 0%	
Company R		3 0%
Company S	4 0%	
Totals		
including "0" responses	3 91%	3 83%
"0" responses not included	4 19%	4 11%

Response Results of 1995 Employee Compensation Market Survey
City of Charlotte Human Resources Department

Survey	Scope	# of jobs included	Response Rate	% Response
National Municipalities	175,000-1 million	87	42 of 70	60 0%
Regional Municipalities	100,000+	126	26 of 37	70 3%
Charlotte Area Companies	Charlotte	39	22 of 63	34 9%
Large National/Regional Airports	U S	10	22 of 35	62.9%
National Crime Laboratories	U S	10	12 of 38	31 6%
National Water-Sewer Utilities	100,000+	32	17 of 20	85 0%
Regional Water-Sewer Utilities	175,000-1 million	32	12 of 13	92 3%

Relative market position for City positions was examined in comparison to the median of average actual salaries being paid by the applicable survey source Extensive data was also collected from private sector sources (Wyatt/ECS, William M Mercer, Ernst and Young, The Employer's Association, etc), as well as from other public sector sources (N C League of Municipalities, Phoenix Executive Compensation Survey, etc)

Data was entered in Mercer CompMaster compensation management software system and reviewed for consistency Data was aged to January, 1996 consistent with our lead-lag policy

Market Position and FY96 Pay Recommendations
City of Charlotte

Data represents: **407 of 436 jobs (93% of all job classes)**
4582 of 4625 employees (99% of all employees)
Data is aged to January, 1996

Relative Market Position for positions in Broadbanding Structure: **95.4% of market**

Pay Recommendation:

Merit Budget: **3.7%**

Average merit increase for FY95 will not exceed 3 7%

Structure Adjustments: **3%**

Based on the review of market data for the Broadbanding and Public Safety structures, 3% structure adjustments are recommended for FY96

Career Development Budget: **0.3%**

0 3% Career Development Budget will be used to reward skills acquisition, job changes and promotions

FY96 Merit Increase Guidelines

Rating Level	Below Market	At Market	Above Market
Consistently Exceeds Requirements	8%-3%	7%-2%	6%-1%
Good Performane Meets/Exceeds Requirements	6%-2%	5%-1%	4%-0%
Meets Basic Requirements	3%-0%	2%-0%	1%-0%
Does Not Meet Basic Requirements	0%	0%	0%

At Market is defined as between 5% below and 5% above the Market Value for the job.

FY96 MONTHLY DENTAL RATES

	CITY PAYS			EMPLOYEE PAYS			TOTAL		
	FY95	FY96	Increase	FY95	FY96	Increase	FY95	FY96	Increase
EMPLOYEE ONLY	$9 90	$10.91	$1.01	$2 22	$2.45	$0.23	$12 12	$13.36	$1 24
EMPLOYEE/CHILD(REN)	$9 90	$10.91	$1.01	$10 70	$11.79	$1.09	$20 60	$22.70	$2.10
EMPLOYEE/SPOUSE	$9 90	$10.91	$1 01	$14 34	$15 80	$1 46	$24 24	$26.71	$2 47
EMPLOYEE/FAMILY	$9 90	$10.91	$1.01	$22 81	$25.14	$2.33	$32 71	$36.05	$3.34

Weekly Increase Amounts for employees

Employee only- $0 05
Employee/child(ren) $0 25
Employee/spouse- $0 34
Employee/family- $0 54

Attachment F

A Brief Overview of the Arts & Science Council

227 W. Trade Street, Suite 250
Charlotte, NC 28202

(704) 372-9667

Pat McCrory

ANALYSIS OF EDUCATIONAL PROGRAMS
(FY94)

• Total Audience Attendance	2,029,830
• Total Service Educational Programs	873,458 or 43% (of 2,029,830)
• Total School Based Educational Programs	475,175
• Total Expenditures - Nonprofit Cultural Sector	$31,169,594
• Total Educational Program Expenditures	$5,144,246 or 17% (of $31,169,594)
• Cost per Education Service	$5.89 (Cost of a movie)

*Jobs Supported in Charlotte by the Nonprofit Arts Industry: 1,107 Full-Time

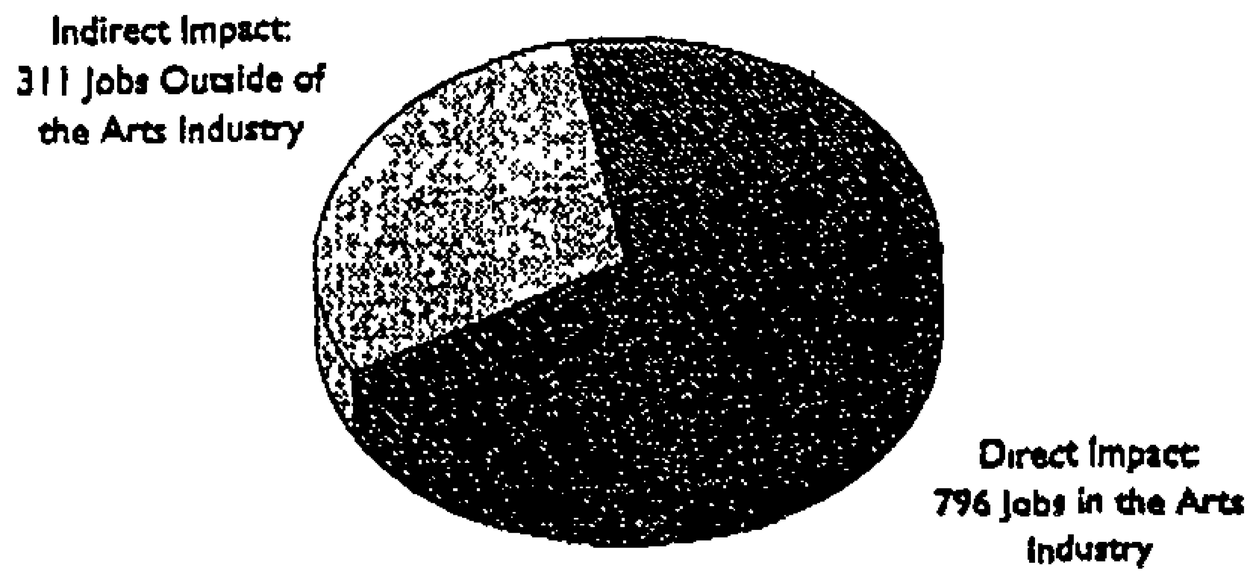

• TOTAL EXPENDITURES	$31,169,594
• FULL-TIME EQUIVALENT ARTS INDUSTRY JOBS	796
• ANNUAL PERSONAL INCOME PAID	$17,496,000
• AVERAGE PERSONAL INCOME PAID	$21,979

EXAMPLES OF WORK FORCE REDUCTION

- Opera Carolina 33% (12 to 8 staff) cut in annual staff FY94 to FY95
- Charlotte Symphony 17% (18 to15 staff) cut in annual staff FY92 to FY95
- Spirit Square 15% (41 to 35 staff) cut in annual staff FY91 to FY95
- Community School of the Arts 14% (7 to 6 staff) cut in annual staff FY93 to FY95
- Charlotte Repertory Theatre 17% (12 to 10 staff) cut in annual staff FY93 to FY95
- ASC 18% (22 to 18 staff) cut in annual staff FY95 to FY96

EXAMPLE OF MERGERS COMPLETED

- Charlotte Symphony and Oratorio Singers
- Charlotte City Ballet and N. C. Dance Theatre
- Charlotte Repertory Theatre, Golden Circle Theatre, and Playworks
- Tarradiddle Players and Children's Theatre

MERGERS UNDER ANALYSIS

- Spirit Square and Performing Arts Center

RATE OF GROWTH IN CHARLOTTE-MECKLENBURG'S CULTURAL/SECTOR'S REVENUES

Income	FY92 (Millions	%)	FY94 (Millions	%)
Earned	8 9	40 6%	16 0	51 2%
Contr.	5.7	26.1%	8 3	26.7%
Govt.	7.3	33.3%	6.9	22.1%
Total	22.0	100.0%	31.2	100.0%

NOTE:

ASC has projected total cultural sector's revenues through the year 2000. With sustained government dollars at FY94 levels, total government dollars as a percentage of total system revenues declines further to 17% in the year 2000.

CULTURAL SECTOR'S

AUDIENCE GROWTH

Grew by 64% in 2 years:

FY 92	**1,287,892**
FY 94	**2,028,830**

CHARLOTTE NONPROFIT CULTURAL SECTOR INDUSTRY (FY94) REVENUE BREAKDOWN

* Total Private Sector (Contributions & Ticket Sales)	$24,254,390	78%
* City through ASC	2,129,580	7%
City Facility Support	1,346,012	4%
* County through ASC	1,285,000	4%
County Facility Support	1,379,000	4%
State Support	642,893	2%
Federal Support	132,125	0%
Total Government	$6,914,610	22%
Grand Total	$31,169,000	

* A portion of private sector funds, and City and County dollars that flow through ASC combine to make ASC funding 23% of total revenues.

REVENUE SOURCES

ARTS COUNCILS IN 50 LARGEST CITIES

	50 CITY AVERAGE	CHARLOTTE
LOCAL GOVERNMENT	88.9%	49%
STATE/FEDERAL	1.7%	3%
PRIVATE SECTOR	9.4%	48%

ARTS & SCIENCE COUNCIL 1995 96 BASIC OPERATING GRANT OVERVIEW

PANEL PRIORITY		PANEL RATING	'93 BOG	'94 BOG	'95 BOG	NEED REQUEST	ADJ. BASE 98%	RECOMMENDED '96 BOG	NEW $$ +/- to ADJ. BASE	PERCENT +/- ADJ. BASE
	Developing									
3	Afro-Am Children's Th.	3	$ 29,580	$ 39,580	$ 40,000	$ 40,000	$ 39,200	$ 39,200	0	0%
1	CLT Children's Choir	1	9,860	13,860	17,000	23,000	16,660	17,500	840	5%
2	CLT Rep Orchestra	2	---	5,000	8,000	12,000	7,840	10,000	2,160	28%
4	Innovative Theatre	4	---	7,000	14,000	40,000	13,720	13,720	0	0%
	SUBTOTAL		$ 39,440	$ 65,440	$ 79,000	$ 115,000	$ 77,420	$ 80,420	$ 3,000	4%
	Restricted Grant (Dev.)							$ 25,000	$ 25,000	
	SUBTOTAL							$ 25,000	$ 25,000	
	Exhibitions									
3	Caroline Raptor	4	---	$ 15,000	$ 25,000	$ 45,000	$ 24,500	$ 37,000	$ 12,500	51%
2	Discovery Place	2	721,772	766,772	810,000	869,000	793,800	850,000	56,200	7%
1	The Light Factory	1	47,328	50,000	60,000	75,000	58,800	75,000	16,200	28%
4	Mint Museum of Art	3	1,463,262	1,498,262	1,500,000	1,550,000	1,470,000	1,500,000	30,000	2%
	SUBTOTAL		$ 2,232,362	$ 2,330,034	$ 2,395,000	$ 2,539,000	$ 2,347,100	$ 2,462,000	$ 114,900	5%
	Multidisciplinary									
1	Afro-Am Cultural Ctr	2	$ 221,860	$ 230,000	$ 245,000	$ 245,000	$ 240,100	$ 248,000	$ 4,900	2%
3	Community School	1	133,110	143,110	148,000	158,000	145,040	154,000	8,960	6%
2	NC Blumenthal PAC	3	147,900	159,900	169,000	210,550	165,620	169,000	3,380	2%
4	Spirit Square	4	345,000	355,000	355,000	370,000	347,900	340,000	(7,900)	-2%
	SUBTOTAL		$ 847,880	$ 888,010	$ 917,000	$ 983,550	$ 898,660	$ 908,000	$ 9,340	1%
	Music/Dance									
4	CLT Choral Society	4	$ 14,611	$ 17,611	$ 20,000	$ 22,250	$ 19,600	$ 20,000	$ 400	2%
	CLT Philharmonic	5	---	-	---	85,000	0	0	0	0%
3	CLT Symphony	3	1,285,556	1,335,556	1,379,000	1,447,950	1,351,420	1,390,000	38,580	3%
1	NC Dance Th	1	83,107	133,107	170,000	215,000	166,600	215,000	48,400	29%
2	Opera Carolina	2	508,706	520,706	468,635	492,100	459,262	490,000	30,738	7%
	SUBTOTAL		$ 1,891,980	$ 2,006,980	$ 2,037,635	$ 2,262,300	$ 1,996,882	$ 2,115,000	$ 118,118	2%
	Theatre									
4	Carolina Crown	4		$ 5,000	$ 5,000	$ 51,500	$ 4,900	0	$ (4,900)	-100%
3	CLT Repertory Th	2	176,415	188,415	205,000	225,500	200,900	218,000	17,100	9%
1	Children's Theatre	1	111,911	111,911	130,000	160,000	127,400	150,000	22,600	18%
1	Theatre Charlotte	3	46,068	50,068	60,000	80,000	58,800	70,000	11,200	19%
	SUBTOTAL		$ 334,394	$ 355,394	$ 400,000	$ 517,000	$ 392,000	$ 438,000	$ 46,000	12%
	TOTALS		$ 5,501,036	$ 5,804,858	$ 5,828,635	$ 6,416 850	$ 5,712,062	$ 6,028,420	$ 316,358	5%
	Restricted Grant (PAC)							$ 150,000		
	GRAND TOTAL							$ 6,178,420		

[1]Includes IBWC grants of $5,000 ('93) & $9,000 ('94) and excludes $150,000 restricted grant to NCBPAC

[2]Excludes $150,000 restricted grant to NCBPAC

Restructuring Government Focus Area Budget Review

Budget Workshop

May 30th, 1995

FINANCIAL PARTNERS
FY95 Information

General Fund Partners

Organization	Total Agency Budget	City's Contribution - (% of Budget)	Staff Size	Personnel Costs - (% of Budget)	Director/ CEO's Salary
Carolinas Partnership	$2,100,088	$150,000 (7%)	8	$445,900 (21%)	$96,000
Centralina Council of Governments	$8,966,000 COG Operating Budget - $2,351,843	$74,948 (3%)	33	$1,528,346 (65%)	$73,764
Charlotte Sister Cities, Inc.	$51,278	$25,000 (49%)	1	$24,200 (47%)	$24,200
Children's Services Network	$180,000	$50,000 (28%)	3	$154,259 (86%)	$81,120
United Family Services - Victims Assistance	$2,861,439 (UFS)/ $424,452 (VA)	$227,171 (54%)	11	$373,621 (88%)	$36,500
Youth Involvement Council	$240,000 (NCCJ)/ $42,000 (YIC)	$20,000 (48% of YIC budget)	1	$24,565 (58%)	$24,565

Arts & Science Council

Organization	Total Agency Budget	City's Contribution - (% of Budget)	Staff Size	Personnel Costs - (% of Budget)	Director/ CEO's Salary
Arts & Science Council	$7,888,715 ASC Operating Budget - $1,004,236	$2,174,580	20	$575,550 (57%)	$105,000

Cultural Facilities Partners

Organization	Total Agency Budget	City's Contribution - (% of Budget)	Staff Size	Personnel Costs - (% of Budget)	Director/ CEO's Salary
Afro American Cultural Center	$470,000	*	10	$235,800 (50%)	$46,800
Children's Theatre of Charlotte	$1,059,700	*	33	$726,630 (69%)	$50,000
Discovery Place	$5,673,000	*	182	$2,652,000 (47%)	$108,500
Mint Museum of Art	$4,395,625	*	59	$1,990,333 (45%)	$101,316
Performing Arts Center	$6,286,908	*	37	$1,526,357 (24%)	$130,000

* The City provides direct support to the Cultural Facilities Partners by maintaining the buildings in which the organizations are housed. Support to these organizations includes carpet and window cleaning, payment on janitorials, payment on utilities, extermination, HVAC repair, payment for general insurance for the building, etc. FY95 support of these agencies was $1,739,501 $1,732,853 and $1,744,877 are recommended for FY96 and FY97, respectively

Municipal Service Districts Partners

Organization	Total Agency Budget	City's Contribution - (% of Budget)	Staff Size	Personnel Costs - (% of Budget)	Director/ CEO's Salary
Central Charlotte Division	$662,049	$453,567 (69%)	2	$89,540 (14%)	$53,240
Charlotte Uptown Development Corporation	$522,500	$522,500 (100%)	3	$249,400 (48%)	$96,000

Other Partners

Organization	Total Agency Budget	City's Contribution - (% of Budget)	Staff Size	Personnel Costs - (% of Budget)	Director/ CEO's Salary
Auditorium-Coliseum-Convention Center Authority	$17,389,817	$356,400 for the New Convention Center Operating Deficit; $549,072 for promotion and marketing (5%)	180 full time, 1,925 part time	$7,374,758 (42%)	$137,304
Charlotte Convention and Visitors Bureau	$3,030,411	$1,517,473 (1st 3% occupancy tax) for activities & programs aiding & encouraging convention & visitor promotion; $1,252,938 (2nd 3% occupancy tax & 1% food and beverage tax) for marketing & promoting new or expanded convention center facilities (91%)	39	$1,514,857 (50%)	$108,000

Arts & Science Council Affiliates

Organization	Total Agency Budget	Staff Size	Personnel Costs - (% of Budget)	Director/ CEO's Salary
Afro-American Children's Theatre	$130,000	2	* $83,522 (41%)	$35,000
Carolina Crown Drum & Bugle Corps	$266,600	1	$29,200 (11%)	$25,000
Carolina Raptor Center	$320,153	10	* $193,427 (60%)	$33,398
Charlotte Children's Choir	$90,000	3	* $60,500 (67%)	$17,000
Charlotte Choral Society	$216,625	9	* $119,000 (55%)	$31,250
Charlotte Repertory Orchestra	$44,620	0	$3,000 (7%)	No Director - Staff consists of Music Director
Charlotte Repertory Theatre	$810,000	10	* $424,520 (52%)	$62,400
Charlotte Symphony Orchestra	$4,847,290	15	* $3,625,184 (75%)	$146,880
Community School of the Arts	$575,672	6	* $428,034 (74%)	$57,000
innovative Theatre	$85,000	1	$24,000 (28%)	$24,000
The Light Factory	$266,495	4	$104,565 (39%)	$33,800
North Carolina Dance Theatre	$1,440,626	16	* $759,649 (53%)	$62,475
Opera Carolina	$1,622,828	8	* $894,250 (55%)	$67,000
Spirit Square Center for the Arts	$2,798,100	45	* $1,881,880 (67%)	$90,640
Theatre Charlotte	$328,400	4	* $130,463 (40%)	$43,260

* Personnel Costs include administrative costs, contract costs (which includes musicians, dancers, etc), and program costs

Neighborhood Development Financial Partners

Organization	Total Agency Budget	City's Contribution - (% of Budget)	Staff Size	Personnel Costs - (% of Budget)	Director/ CEO's Salary
Bethlehem Center	$4,676,123	$158,825 (4%)	10	$90,994.55 (58%)	$43,245
Charlotte Housing Authority McAlpine Terrace & Glen Cove	$27,496,554 (CHA) $4,150,000 (McAlpine Terrace & Glen Cove)	$275,000 (7%)	N/A	N/A	$90,623
Charlotte Housing Authority - Family Self-Sufficiency.	$27,496,554 (CHA) $350,000 (Family Self-Sufficiency)	$350,000 (100%)	15	N/A	$54,995 *Program Mgr. Salary
Charlotte Housing Authority - Safe Neighborhood Awareness Program	$27,496,554 (CHA) $157,596 (SNAP)	$157,596 (100%)	13	$157,596 (100%)	$54,995 *Program Mgr. Salary
Charlotte-Mecklenburg Housing Partnership - Affordable Housing	$9,498,153 (CMHP) $2,000,000 (Affordable Housing)	$2,000,000 (100%)	14	$192,829 (10%)	$65,300
Charlotte-Mecklenburg Housing Partnership - Pre-Purchase Mortgage Counseling	$9,498,153 (CMHP) $142,747 (Pre-Purchase Mortgage Counseling)	$142,747 (100%)	5	123,907 (87%)	$65,300
Crisis Assistance Ministry - Energy Assistance	$3,234,945	96,432 (3%)	N/A	N/A	$39,488

Neighborhood Development Financial Partners - Continued

Organization	Total Agency Budget	City's Contribution - (% of Budget)	Staff Size	Personnel Costs - (% of Budget)	Director/ CEO's Salary
Crisis Assistance Ministry - Emergency Assistance (Homeless Prevention)	$3,234,945 (CAM) $2,419,121 (Homeless Prevention)	100,000 (4%)	N/A	N/A	$39,488
Family Housing Services	$426,692	$308,088 (73%)	8	$281,790 (92%)	$40,950
Gethsemane Enrichment Program	$598,308	$486,149 (82%)	16	$383,212 (79%)	$13,496
YWCA - Central Carolinas (Scattered Site Housing Program)	$3,500,000 (YWCA) $292,917 (Scattered Site Housing)	$83,503 (29%)	4	$58,392 (70%)	$68,250
YMCA - Good Neighbors	$511,704 (YMCA) $131,031 (Good Neighbors)	$37,515 (29%)	14	36,276 (29%)	$56,211
YMCA - Success by Six	$511,704 (YMCA) $380,673 (Success by Six)	$41,000 (11%)	14	33,691 (11%)	$56,211