AGENDA

Meeting Type:	SPECIAL
Date:	05/25/1995
FY 96 & FY 97	BUDGET WORKSHOP

City of Charlotte, City Clerk's Office

City of Charlotte
FY96 & FY97 Budget Workshop
May 25, 1995
5:00-7:00 p.m.

5.00 Dinner & Announcements, Discussion of Budget Review Process

5.15-6 00 Focus Area Plan Reviews
- City Within A City
- Economic Development
- Community Safety

6:00-6·45 Key Business Budget Discussion and Questions
- Police
- Neighborhood Development
- Planning
- Fire

6.45 Break and Adjourn to Public Hearing (scheduled for broadcast at 7 00)

FY96-FY97 Operating Budget
and
FY96-FY2000 Capital Investment Plan
Public Hearing

May 25, 1995
7:00 p.m.

1. Mayor's Opening Remarks

   Purpose of Public Hearing
   City Manager's Recommended Budget presented to Council on May 22nd for Review
   Several Workshops Scheduled for Budget discussion
   Introduces Budget Video

2. Budget Video Presentation

3. Speakers

4. Mayor Adjourns Meeting

City of Charlotte
FY96 & FY97 Budget Workshop
Handouts
May 25, 1995

Table of Contents

Questions and Answers from Media Briefing on May 22, 1995 . . . 135

Attachment 1 - User Fee Memo 137

The following questions were asked by the media during the Media Briefing on the Budget on May 22, 1995:

Q1. How many sidewalks can be constructed for $1 million?

32 miles of sidewalks are projected to be constructed with the $5 million in additional funding. Therefore, $1 million would construct approximately 6.5 miles of sidewalk
(cost varies between $30 and $60 per linear foot based on slope, drainage, and right-of-way)

Q2. What are the top 5 locations on the sidewalk list?

Staff's recommended top 5 sidewalks would be along the following thoroughfares·

E. Sugar Creek between Academy Street and The Plaza
Fairview Road between Park Road and Park South Drive
South Boulevard between Scalybark and Woodlawn
W Sugar Creek between Hidden Valley and Interstate 85
Conference Drive between Independence Blvd and Monroe Road

Although funds would be divided equally between thoroughfare and non-thoroughfare streets, the first 5 on the priority list are thoroughfares

Q3. When was the last transit fare increase?

September, 1991 Fares went from 70¢ to 80¢ for local service and $1 00 to $1 15 for express service

Q4. How many of the 141 eliminated positions are filled?

About 46 positions are still filled The number decreases weekly as employees are either placed within or leave the organization

Attachment 1

CITY OF CHARLOTTE
CITY MANAGER'S OFFICE
MEMORANDUM

TO: Mayor and City Council

FROM: O. Wendell White
City Manager

DATE: May 25, 1995

SUBJECT: FY96 User Fees

During the budget process the updated user fees are shared for your information.

I recommend that the FY96 user fees remain the same as in FY95 There are two reasons for this recommendation.

> The KPMG Peat Marwick Permitting Process Review recommends that the City conduct an activity based costing analysis to determine the appropriate level of fees
>
> This year department staff received training in activity based costing and management Instead of updating fees, time was spent learning how to improve our costing information.

The FY96 projected revenue from the City's user fees is approximately $570,000. Holding the fees at FY95 levels will have little impact on revenues.

There are four departments affected· Engineering and Property Management, Fire, Planning, and Transportation.

Customers will be notified of this decision shortly.

City of Charlotte
1995 Citizen Survey
Services Assessment Update

Background

The 1995 Citizen Survey was used to update the information received from the original 1992 services assessment process Highlights of the citizen responses were presented to City Council at their May 1, 1995 workshop Attached is the narrative portion of the report from MarketWise, Inc who conducted both the citizen and Mayor/Council portions of the survey The entire MarketWise, Inc report, with data tables and cross tabulations of the results of each question by area of the city, length of residence in the City, age, gender and race is in the Council library

The original services assessment looked at 41 major service categories within City government's responsibility In order to obtain the most useful data possible for the budget process, MarketWise staff suggested that only the lower priority services be included in this update survey and that those lower priority services be explored in more detail Therefore, this report looks at the ranking of 12 of 15 lower priority categories (three were dropped because they were governed by ordinances or other legal mandates and couldn't be cut or eliminated) These categories contained 53 specific services or programs which the City of Charlotte provides either directly or through contract with a private agency The rankings were made by 409 randomly selected citizens, the Mayor and City Council and senior staff of City Government

This report provides a comparison of the results of the senior city staff rankings, the Mayor/Council ratings and the citizen ratings for the portion of the survey questions dealing with the services assessment process

Results

This data is intended to be an adjunct in the budget deliberation process The report focuses on those services which received less than 50% support, defined to be a response of "high" or "very high" budget priority, from the citizens, Mayor/Council and senior staff Fifteen of the 53 services included in the survey received less than 50% support from all three groups and are included in the list below.

The list below is in descending order, by the percentage of citizens ranking the service as a "high" or "very high" budget priority. The number included by each service is the citizen rating See Table A for all three numerical rankings.

- Plant and maintain flowers and landscaping on City property (48%)
- Operate and maintain cemeteries (43%)

- Pick up and destroy unwanted / stray animals (41%)
- Rescue injured animals (41%)
- Historic Districts and Neighborhoods (40%)
- Mint Museum (39%)
- Contract for spay / neuter services (35%)
- Centralina COG (34%)
- Sister Cities (33%)
- Arts and Science Council (33%)
- Afro-American Cultural Center (32%)
- Pet Adoption Services (32%)
- Animal lost and found (31%)
- Art in public buildings (18%)
- Pressure wash Tryon Street Mall sidewalks nightly (17%)

The conclusions to be drawn from these results are that these services and agencies have less public, political and city management support than the other 37 services or agencies on the list While some perhaps can be eliminated entirely, others could only be reduced in scope In either case, reductions in these services would have less public impact than the other services listed in the survey

Table A shows all 53 services included in the survey, ranked in order of citizen support The first four columns (two each for city staff and Mayor/Council responses) show comparative data by average (mean) score and % ranking "high" or "very high" budget priority The fifth and sixth column are the citizen responses.

It should be noted that only the lower third of the original list of 41 services from the 1992 services assessment process were included in the 1995 services assessment update

Table A
Comparison of Services Assessment Responses
Staff – Mayor/Council – Citizens

Question #		Staff response mean	Staff response % high/very high	Council response mean	Council response %high/very high	Citizen response mean	Citizen response %high/very high
56	Provide natural disaster planning & response	4 19	81 25%	4 54	100 00%	4 0	78 00%
21	Police and neighborhood dialogues	4 13	81 25%	4 00	81 82%	3 9	74 00%
46	Pick up and destroy dangerous animals	4 35	88 24%	3 81	72 73%	3 9	73 00%
38	Collect and dispose of dead animals	3 82	64 71%	4 00	63 64%	3 9	73 00%
48	Provide rabies control	4 47	94 12%	4 18	90 91%	3 8	72 00%
57	Coordinate training/response to hazardous matena	4 13	81 25%	4 27	81 82%	3 9	71 00%
13	Victim s Assistance	3 12	52 94%	3 63	72 73%	3 9	69 00%
17	Children s Services Network	1 94	11 76%	3 54	45 45%	3 8	68 00%
15	Stop the Killing	2 58	29 41%	3 18	36 36%	3 9	65 00%
55	Provide nuclear power station emergency response	3 63	56 25%	4 10	80 00%	3 7	63 00%
40	Flush dirty streets when needed	3 53	47 06%	4 09	81 82%	3 6	63 00%
14	Youth Involvement Council	2 38	18 75%	3 27	36 36%	3 7	62 00%
32	Cut grass and brush on City property	4 00	87 50%	3 90	81 82%	3 6	58 00%
18	Carolinas Partnership	2 71	23 53%	3 00	27 27%	3 6	57 00%
36	Collect and dispose of appliances	3 94	64 71%	4 00	81 82%	3 5	57 00%
20	Investigate allegations of police misconduct	4 13	64 71%	3 90	72 73%	3 6	56 00%
31	Operate Customer Service Center	3 81	68 75%	4 36	90 91%	3 5	54 00%
9	Discovery Place	2 65	5 88%	3 00	27 27%	3 5	54 00%
53	Operate animal shelter	3 18	29 41%	3 36	27 27%	3 5	52 00%
49	Investigate complaints of animal cruelty	2 94	23 53%	3 09	36 36%	3 5	50 00%
35	Plant and maintain trees	3 44	43 75%	3 36	45 45%	3 4	50 00%
33	Plant/maintain flowers/landscaping on City propert	3 31	37 50%	3 36	36 36%	3 4	48 00%
37	Collect and dispose of non–recyclables	3 94	64 71%	4 00	72 73%	3 3	48 00%
10	Nature Museum	2 41	5 88%	2 72	18 18%	3 4	47 00%
28	Provide info about City events to media	3 50	50 00%	3 63	63 64%	3 3	45 00%
42	Clean "Tryon Street Mall" area	3 76	64 71%	3 81	81 82%	3 3	45 00%
27	Notify public of City meetings	4 06	81 25%	4 36	90 91%	3 3	44 00%
23	Enforce the Fair Housing Ordinance	3 00	35 29%	3 90	54 55%	3 3	44 00%
34	Operate and maintain cemeteries	2 19	6 25%	2 63	27 27%	3 3	43 00%
47	Pick up and destroy unwanted/stray animals	3 12	35 29%	3 00	36 36%	3 2	41 00%
45	Rescue injured animals	2 88	11 76%	2 36	10 00%	3 2	41 00%
44	Clean up during/after special events in CBD	3 65	64 71%	3 45	54 55%	3 2	41 00%
52	License animals	3 63	47 06%	3 72	54 55%	3 2	41 00%
11	Historic Districts and neighborhoods	2 59	29 41%	2 63	30 00%	3 2	40 00%
8	Performing Arts Center	2 29	5 88%	2 54	9 09%	3 2	40 00%
22	Investigate & resolve employment discrimination c	2 44	11 76%	3 09	54 55%	3 2	40 00%
7	Mint Museum	2 18	5 88%	2 09	10 00%	3 2	39 00%
24	Mediate Landlord Tenant disputes	2 88	37 50%	3 72	63 64%	3 2	39 00%
39	Sweep all City streets on regular schedule	3 00	23 53%	3 81	63 64%	3 2	38 00%
41	Collect garbage from Uptown businesses	3 35	52 94%	3 54	54 55%	3	36 00%
51	Contract for spay/neuter services	3 88	11 76%	3 09	27 27%	3 1	35 00%
19	Centralina Council of Governments	2 29	11 76%	2 45	18 18%	3 2	34 00%
16	Sister Cities	2 24	5 88%	2 81	9 09%	3 1	33 00%
6	Arts and Science Council	2 65	11 76%	2 81	27 27%	3 1	33 00%
5	Afro–American Cultural Center	2 76	17 65%	2 45	30 00%	3 1	32 00%
50	Provide pet adoption services	2 13	0 00%	2 30	0 00%	3	32 00%
26	Produce/distribute city brochures/newsletters	3 56	56 25%	3 63	45 45%	3	31 00%
54	Provide animal lost and found	2 24	0 00%	2 90	18 18%	3	31 00%
30	Provide staff/equipment for public meetings	3 31	37 50%	3 90	81 82%	3	28 00%
29	Coordinate special events, news conferences	3 31	50 00%	3 54	54 55%	3	27 00%
25	Operate Gov t Cable Channel 16	3 00	25 00%	3 63	63 64%	2 7	22 00%
12	Art for new City buildings	2 53	23 53%	2 36	9 09%	2 4	18 00%
43	Pressure wash Tryon Street mall sidewalks	3 00	35 29%	3 09	27 27%	2 5	17 00%

Public Opinion Survey of City Services

Summary Report
May 22, 1995

MarketWise

TABLE OF CONTENTS

Background and Objectives 1

Methodology 2

Perceptions of City Government 3

Overall Performance 3
City Spending 4
Essential Services 5

Charlotte City & Mecklenburg County
Government Consolidation 7

Support for Consolidation 7
Benefits of Consolidation 8

City Services 9

Service Area Rankings 9
Assessment of Service Area Programs 10
Emergency Management 12
Funding to Community Agencies 12
Customer Service Center 13
Collection of Miscellaneous Items..... 13
Community Relations 13
Landscape Maintenance 14
Urban Forestry 14
Street Cleaning 14
Animal Control 15
Funding to Cultural Agencies 16
Public Information 16
Maintain Central Business District 17

Capital Projects 18

Importance of Capital Projects 18
Funding for Capital Projects 19

BACKGROUND AND OBJECTIVES

The present study builds upon findings from the 1992 Assessment of City Services. The 1992 study identified and defined 41 service areas funded by the City of Charlotte. These service areas were tested and ranked in order of importance.

The 1995 study focuses on 12 of the 15 service areas that ranked in the bottom third (in terms of importance) in the 1992 service assessment. Three service areas were dropped from consideration because they were legally mandated services.

This study was designed to give the city detailed information and direction about service areas and specific programs that could be considered for funding elimination or reduction. Specific research objectives for this study were to:

- Measure overall perceptions of City Services
- Determine importance of specific services Charlotte City Government provides
- Determine citizens' views on City-County government consolidation
- Determine citizen's opinions about capital needs
- Measure willingness to pay more taxes

Study questions were worded with neutral phrasing to get respondents true opinions. The wording for specific service area programs were taken from City descriptions of the programs. Benefits or purposes of the programs were not included in descriptions.

METHODOLOGY

Telephone interviews were conducted with 409 City of Charlotte residents. The sample for telephone interviewing was purchased from Survey Sampling, Inc, and was drawn proportionally across all areas of the City. Areas of the City, as defined by zip code, are represented in the final sample as follows:

North Charlotte	14%
South Charlotte	43%
East Charlotte	33%
West Charlotte	10%

Survey participants were screened to ensure they were residents of Charlotte. One male or female head of household was randomly selected to participate in the study. This ensures that both males and females are represented in the final sample. The final sample consists of 48% males and 52% females.

MarketWise developed the survey questionnaire with input from the City of Charlotte. The final questionnaire was approved by the City and took 22 minutes on average to administer.

All interviewing was conducted from the MarketWise central telephone location under the supervision of a MarketWise staff member. Four dialing attempts were made to each sampled telephone number to ensure hard to reach respondents were included in the study, and that all sample members had an equal probability of being included in the final sample.

A sample size of 400 has a sampling error of plus or minus five percentage points at the 95% confidence level. This means that results from 95 out of 100 samples would vary no more than five percentage points (higher or lower) from results obtained if all members of the population were surveyed.

PERCEPTIONS OF CITY GOVERNMENT

Overall Performance

The average rating of overall performance for Charlotte City Government is 3.4 Overall performance was rated on a 1 to 5 scale where 1 was very poor and 5 was excellent. Chart 1 shows the percentage of respondents giving each rating on the scale. Almost half of the respondents (46%) rate overall performance as good, and 38% rate it as fair.

Chart 1

Overall Performance of Charlotte City Government

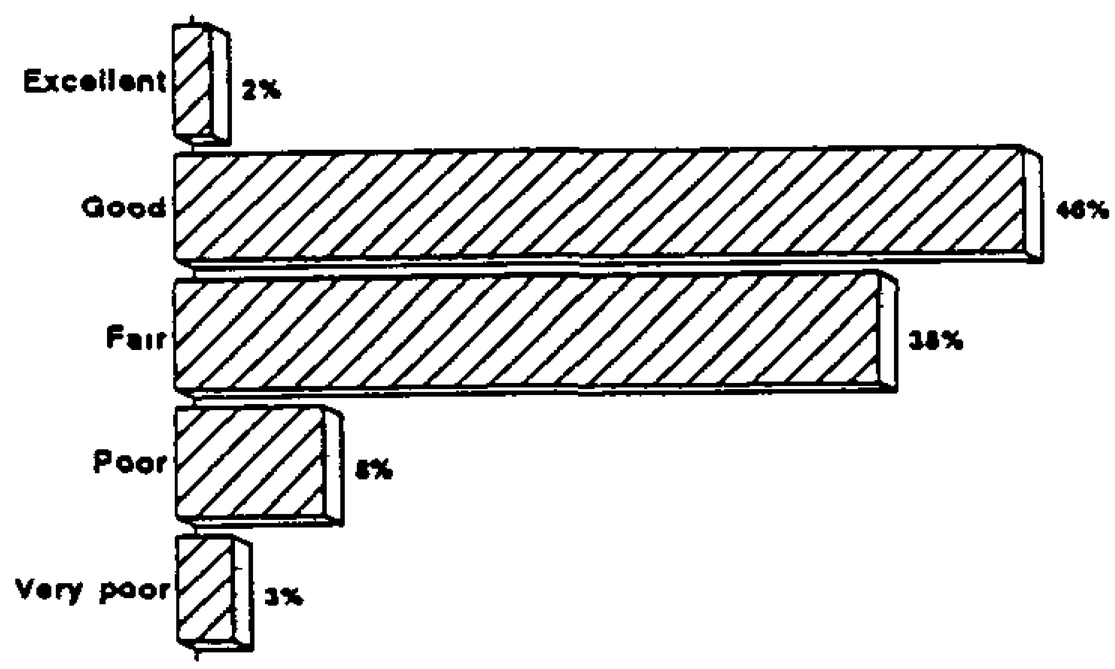

Citizens of West Charlotte (n=40) give City government a slightly lower than average rating for overall performance at 3.1. Almost a quarter of respondents (23%) from West Charlotte give a poor or very poor rating.

City Spending

The average rating for Charlotte City Government on spending tax dollars wisely is 3.0 on the same 1 to 5 scale where 1 means very poor and 5 means excellent. Forty-four percent of respondents rate City Government fair on spending (See Chart 2). Again respondents from West Charlotte give lower ratings (2.7 on average) than respondents from other areas of Charlotte.

Chart 2
Performance of Charlotte City Government
On Spending Tax Dollars Wisely

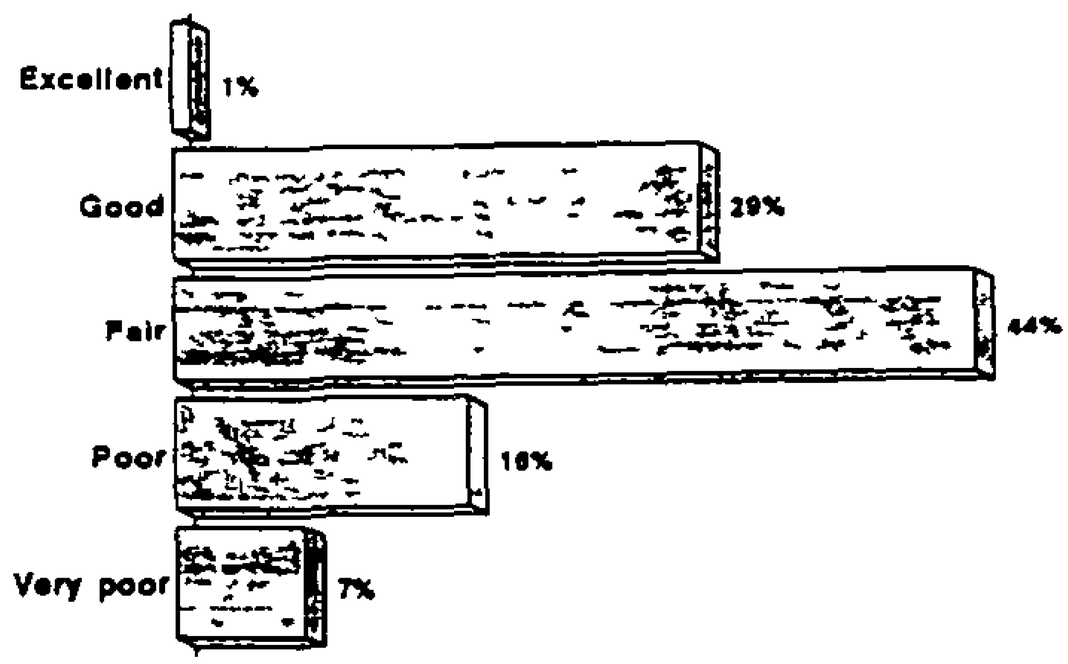

In general, respondents feel City government "wastes taxpayer money" on unnecessary services. Sixty-six percent of respondents in this study agree with this statement (35% agree somewhat and 31% agree strongly). Further, less than half (46%) of study respondents agree that City government "works to keep costs down" (33% agree somewhat and 13% agree strongly). Less than one third (31%) of respondents feel the City spends the right amounts of money for the services it provides.

Essential Services

As shown in Chart 3, the most important services the City provides are police/law enforcement (48%), garbage and sanitation services (33%), and fire/rescue services (26%). These are high priorities for all respondents regardless of area of residence in the City, length of residence, age, gender or race.

Chart 3

Most Important Services City of Charlotte Provides

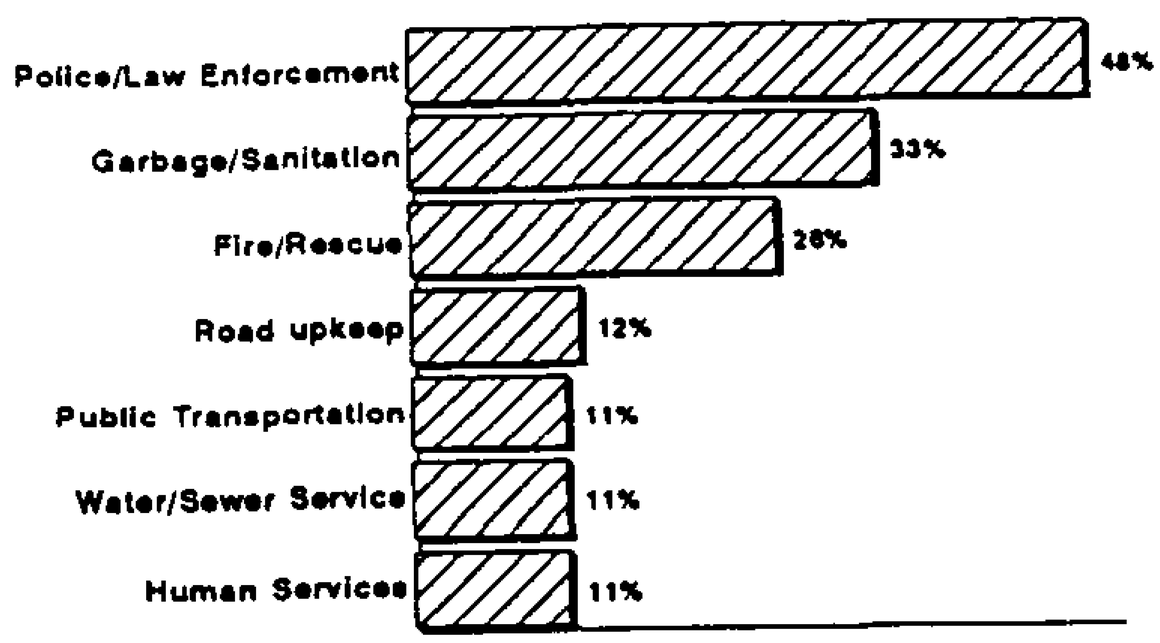

Multiple response question.

Charlotte City Government receives its highest ratings for providing essential services. The average rating is 3.9 on the 5-point scale. Sixty-four percent of respondents rate City Government good, and 15% rate the City excellent in providing essential services (See Chart 4).

Chart 4

Performance of Charlotte City Government On Providing Essential Services

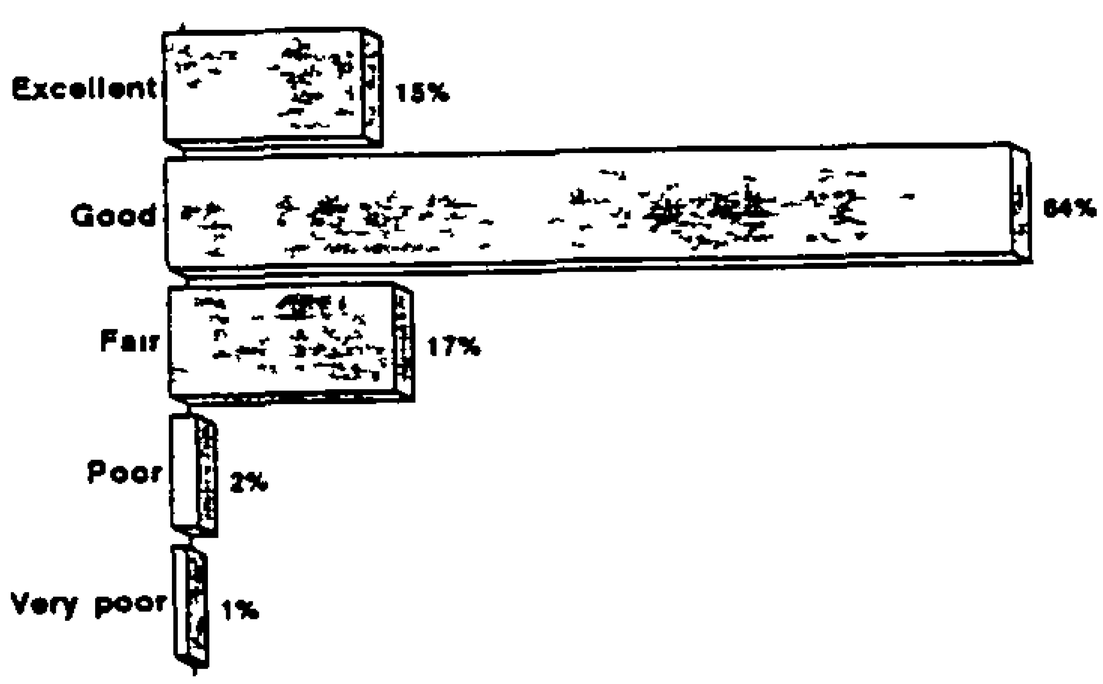

The majority of respondents (71%) indicate a willingness to pay $10 more in property taxes a year to help fund essential services. Six percent of the respondents said they would pay $5 more per year. However, nearly a quarter (23%) of respondents are not willing to pay any more property taxes.

According to respondents, the best way for the City to get funds for essential services is through taxes. When asked how the City could get funds for essential services if there was a problem funding them at current levels, respondents said the City could raise taxes (19%), raise property taxes (15%) or raise other taxes like sin taxes or commuter taxes (13%). Other responses targeted spending practices where respondents suggested cutting spending (12%) or spending money more wisely (10%).

CHARLOTTE CITY AND MECKLENBURG COUNTY GOVERNMENT CONSOLIDATION

Support for Consolidation

Respondents show strong support for consolidating Charlotte City and Mecklenburg County governments. As Chart 5 shows, 61% of respondents say they would vote for consolidation if there were a vote today.

Chart 5
Acceptance of City-County Consolidation

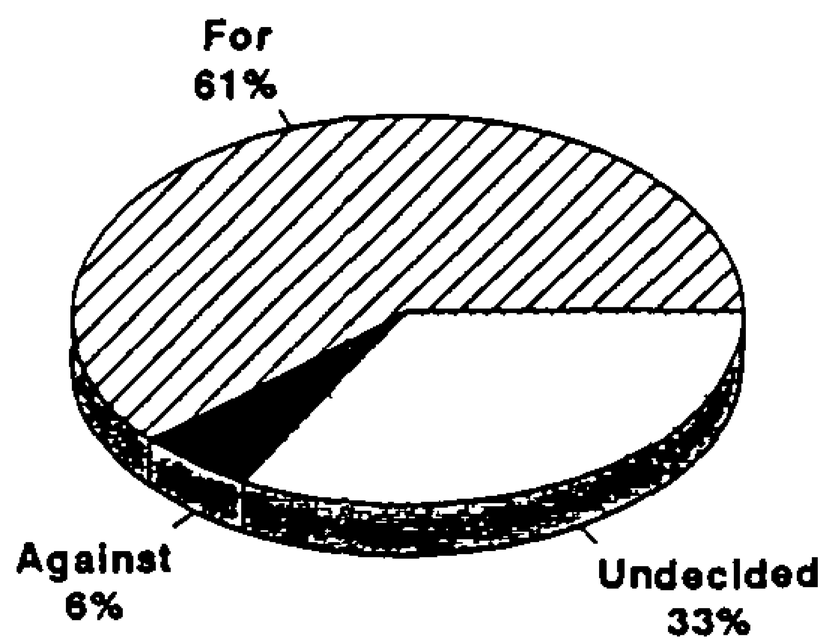

Respondents support consolidation because they believe it will eliminate duplicated services and will save money (See Table 1). Twenty-three percent, say consolidation will eliminate the duplication of services, while 20% say it will save money by not duplicating services. Another 15% simply say consolidation will save money.

Table 1
Reasons for Supporting Consolidation

	% of Respondents Who Support Consolidation
Eliminate duplication of services	23%
Save money by not duplicating services	20%
More efficient	17%
Save money	15%
City is the county anyway	14%
Lower taxes	12%
Government will run better	12%

Of the 409 survey participants only 24 (6%) oppose City-County Consolidation. Reasons respondents give for being against consolidation include: it will not be efficient, will put too much power in one place, the city and county have different purposes so they need to be separate, and taxes would be higher.

Thirty-three percent of respondents are undecided on the question of consolidation. Of these respondents, most say they need more information about the consolidation or they don't know how services will be handled under consolidation.

Benefits of Consolidation

Respondents feel City-County consolidation will allow for better future planning and growth. Three-fourths (75%) agree strongly or somewhat with this statement. In addition, 72% say consolidation will save money, and 71% say it will allow for better services for citizens. Further, only 25% of respondents feel consolidation will create a big government bureaucracy.

CITY SERVICES

Service Area Rankings

Table 2 presents the current ranking of each selected service area, the 1992 rankings of each service area, and the aggregated mean rating of the service area. Aggregated mean ratings are computed by averaging the ratings of all the programs included in the service area.

The Customer Service Center and Urban Forestry service areas are single services - no additional programs make up these service areas. Therefore, their aggregated mean ratings are the same as the ratings of the single service area.

Table 2
Selected Service Areas Tested in 1995 Study

1995 Ranking	1992 Ranking*		Mean Ratings
1	5 (31)	Emergency Management	3.9
2	7 (33)	Funding to Community Agencies	3.6
3	11 (37)	Customer Service Center	3.5
4	4 (30)	Collection of Miscellaneous Items	3.5
5	8 (34)	Community Relations	3.4
6	6 (32)	Landscape Maintenance	3.4
7	9 (35)	Urban Forestry	3.4
8	1 (27)	Street Cleaning	3.4
9	3 (29)	Animal Control	3.3
10	10 (36)	Funding to Cultural Agencies	3.1
11	12 (40)	Public Information	3.1
12	2 (28)	Maintain Central Business District	3.0

* The rankings based on the 1992 study have been altered to reflect relative importance rankings. In 1992, these service areas were ranked between 27 and 41 The number in parentheses indicates the 1992 ranking.

As this table shows, all selected service areas are of medium importance since ratings are primarily in the middle of the 1 to 5 scale. The most important services among those selected for this study are: Emergency Management, Funding to Community Agencies, Customer Service Center, and Collection of Miscellaneous Items. The least important service areas are Funding to Cultural Agencies, Public Information, and Maintaining the Central Business District.

Assessment of Service Area Programs

In all, 53 specific programs funded by the City were evaluated in this study. Table 3 lists the programs for each service area ranked in order of priority according to the average rating for each program. The table also shows the percent of respondents who give either a very high or high budget priority rating for each program.

From this chart we see that the programs have average ratings in the middle of the scale. This indicates a medium budget priority for the programs. There is low variation in the average ratings. Most programs have average ratings between 3.0 and 3.5 on the 5 point scale.

Looking at the percentage of respondents giving the top ratings shows more variablity in the priority placed on the individual programs. From the percent of top ratings we see that just 19 programs are viewed as budget priorities (high or very high) by the majority of sample respondents (more than 50% give one of the top two ratings).

Table 3

Overall Assessment of Selected City Services

	Mean Rating	% Rating High or Very High
Natural disaster planning & response	4.0	78%
Police Neighborhood Dialogues	3.9	74%
Pick-up & destroy dangerous animals	3.9	73%
Response to hazardous materials incidents	3.9	71%
United Family Services	3.9	69%
Stop the Killing	3.9	65%
Rabies control	3 8	72%
Child Services Network	3.8	68%
Flush dirty streets	3.6	63%
Nuclear emergency response program	3.7	63%
Collect & dispose of dead animals	3.7	62%
Youth Involvement Council	3.7	62%
Mow City property	3.6	58%
Carolinas Partnership	3.6	57%
Investigate Police Misconduct	3.6	56%
Collect & dispose of recyclable items	3.5	57%
Customer Service Center	3.5	54%
Discovery Place	3.5	54%
Operate animal shelter	3.5	52%
Animal cruelty	3.5	50%
Urban Forestry	3.4	50%
Maintain landscaping	3.4	48%
Nature Museum	3.4	47%
Collect & dispose of non-recyclable metal items	3.3	48%
Event information to media	3.3	45%
Clean Tryon Mall	3.3	45%
Notify public of City meetings	3.3	44%
Enforce Fair Housing Ordinance	3.3	44%
Operate cemeteries	3.3	43%
Cleaning for Uptown events	3.2	41%
Rescue injured animals	3.2	41%
License animals	3.2	41%
Pick-up & destroy unwanted/stray animals	3.2	41%
Investigate employment discrimination	3.2	40%
Historic Districts	3.2	40%
Performing Arts Center	3.2	40%
Mint Museum	3.2	39%
Mediate cases to free up court system	3.2	39%
Sweep City streets	3.2	38%
Centralina Council of Governments	3.2	34%
Contract for spay-neuter services	3.1	35%
Sister Cities	3.1	33%
Arts & Science Council	3.1	33%
Afro Am. Cultural Ctr.	3.1	32%
Collect garbage daily from Uptown businesses	3.0	36%
Pet adoption services	3.0	32%
Animal lost & found	3.0	31%
Government services information	3.0	31%
Staff & equipment for City meetings	3.0	28%
Coordinate events	3.0	27%
Operate the Government Channel	2.7	22%
Art for City buildings	2.4	18%
Pressure-wash Tryon Mall sidewalks nightly	2.5	17%

Emergency Management

Emergency Management has the highest aggregated mean rating (highest budget priority) of the twelve service areas. Three specific programs comprise the Emergency Management service area: natural disaster planning, response to hazardous materials incidents, and the nuclear emergency response program. Each of these programs was rated above the midpoint on the scale with the majority of respondents giving each a high or very high budget priority (See Table 4).

Table 4

	Mean Rating	% Rating High or Very High
Natural disaster planning and response	4.0	78%
Training & response to hazardous materials incidents	3.9	72%
Nuclear power station emergency response program	3.7	62%

Funding to Community Agencies

This service area is ranked second overall. Of the programs included in this service area, United Family Services and Stop the Killing have the highest mean ratings (See Table 5). These programs are given a high budget priority by more than two-thirds of respondents. The Centralina Council of Governments and the Sister Cities programs get the lowest ratings with only about a third giving either a high budget priority.

Table 5

	Mean Rating	% Rating High or Very High
United Family Services	3.9	69%
Children's Services Network	3.8	68%
Stop the Killing	3.9	65%
Youth Involvement Council	3.7	62%
Carolinas Partnership	3.6	57%
Centralina Council of Governments	3.2	34%
Sister Cities Program	3.1	33%

Customer Service Center

Respondents were asked how high a budget priority it should be for the City of Charlotte to operate a Customer Service Center to provide a single place for citizens to get information, request service and register complaints. The average rating for this is 3.5 on the scale where 1 means not a budget priority and 5 means a very high budget priority. Fifty-four percent of respondents give it a high or very high rating.

Collection of Miscellaneous Items

Collection of Miscellaneous Items is provided by Solid Waste Services. The programs in this service area are all rated above the midpoint of the rating scale. As shown in Table 6 collecting and disposing of dead animals is the highest priority in this area with an average rating of 3.7 on the 5 point scale, and 62% of respondents giving it one of the top two ratings on the scale.

Table 6

	Mean Rating	% Rating High or Very High
Collect and dispose of dead animals	3.7	62%
Collect & dispose of large recyclable metal items	3.5	57%
Collect & dispose of large non-recyclable bulky items	3.3	48%

Community Relations

The highest priority program for Community Relations is police and neighborhood dialogues about crime prevention and City services with an average rating of 3.9. This is among the highest program ratings in the study. Table 7 gives the average ratings for all the programs included in Community Relations along with the percent of respondents rating at the top of the scale.

Table 7

	Mean Rating	% Rating High or Very High
Police/neighborhood dialogues	3.9	74%
Allegations of Police Misconduct	3.6	56%
Fair Housing Ordinance	3.3	44%
Employment discrimination	3.2	40%
Landlord tenant disputes	3.2	39%

Landscape Maintenance

Of the programs included in the Landscape Maintenance service area, cutting brush and grass on City property and street rights-of-way has the highest mean rating at 3.6 with 59% giving one of the top two budget priority ratings. As Table 8 shows, less than half of study respondents consider planting and maintaining landscaping and operating City cemetaries budget priorities.

Table 8

	Mean Rating	% Rating High or Very High
Cut grass and brush on City property	3.6	59%
Plant & maintain landscaping on City property	3.4	48%
Operate & maintain City cemeteries	3.3	43%

Urban Forestry

Respondents were asked to rate how high a budget priority it should be for the City to plant and maintain trees on City property and along City street rights-of-way. Respondents give this an average rating of 3.4 on the scale with half (50%) of respondents saying it is a high or very high budget priority for the City.

Street Cleaning

Street Cleaning includes flushing dirty streets and sweeping all City streets on a regular schedule. Flushing dirty streets is a higher priority for respondents with a rating of 3.6 (63% rating high or very high) than sweeping streets with an average rating of 3.2 and just over one-third (3.8%) rating it as a high or very high budget priority (See Table 9).

Table 9

	Mean Rating	% Rating High or Very High
Flush dirty streets	3.6	63%
Sweep all City streets on a regular schedule	3.2	38%

Animal Control

Animal Control encompasses the largest number of programs among the service areas tested in this study. Table 10 lists the programs included in Animal Control and gives the mean rating and percent of respondents rating the program as a high or very high budget priority. The highest priority programs under Animal Control are picking up and destroying dangerous animals (3.9) and providing rabies control (3.8). The lowest priority ratings are given for providing pet adoption services (3.0) and providing animal lost and found services (3.0).

Table 10

	Mean Rating	% Rating High or Very High
Pick up and destroy dangerous animals	3.9	73%
Provide rabies control	3.8	72%
Operate an animal shelter	3.5	52%
Investigate complaints and reports of animal cruelty	3.5	51%
Pick up and destroy unwanted & stray animals	3.2	41%
Rescue injured animals	3.2	41%
License animals	3.2	40%
Contract for pet spay-neuter services	3.1	34%
Provide pet adoption services	3.0	32%
Provide animal lost and found service	3.0	31%

Funding to Cultural Agencies

Funding to Cultural Agencies is one of the three least important service areas evaluated in this study. With an aggregated average rating of 3.1, it is a medium priority service area for respondents. The highest priority program under Funding to Cultural Agencies is Discovery Place a mean rating of 3.5 and just over half (55%) of respondents giving it a high or very high budget priority rating (See Table 11). Next is the Nature Museum at 3.4. Art for New City Buildings receives the lowest rating of any specific program in this study at 2.4 on the 5 point scale. Only 18% of respondents give this program a high or very high budget priority rating.

Table 11

	Mean Rating	% Rating High or Very High
Discovery Place	3.5	55%
Nature Museum	3.4	47%
Performing Arts Center	3.2	40%
Mint Museum	3.2	39%
Historic Districts & Neighborhoods	3.2	39%
Afro American Cultural Center	3.1	33%
Arts & Science Council	3.1	33%
Art for new City buildings	2.4	18%

Public Information

Less than half of the respondents rate the Public Information programs as high or very high budget priorities. In fact, four of the nine lowest rated programs come from this service area. Table 12 shows the specific ratings of each Public Information program as well as the percent of respondents giving one of the top two ratings to each program.

Table 12

	Mean Rating	% Rating High or Very High
Provide information to news media	3.3	44%
Notify citizens of public meetings	3.3	43%
Produce and distribute Information about government services	3.0	31%
Provide staff & equipment for public meetings	3.0	28%
Coordinate events, news conferences, and other meetings	3.0	27%
Operate the Government Channel	2.7	22%

Maintain Central Business District

This service area has the lowest aggregated mean rating of any service area. Table 13 gives the average ratings of each program in this service area and the percent of respondents who think the individual programs are high or very high budget priorities for the City of Charlotte. Pressure washing Tryon Mall sidewalks nightly has the lowest percent of high or very high ratings in this study with a resulting average rating of 2.5.

Table 13

	Mean Rating	% Rating High or Very High
Clean the Tryon Street Mall area	3.3	45%
Provide cleaning for special events Uptown	3.2	41%
Collect garbage from Uptown businesses daily	3.0	37%
Pressure wash Tryon Street Mall sidewalks nightly	2.5	18%

CAPITAL PROJECTS

Importance of Capital Projects

Respondents place high importance on the Capital Projects tested in this study. The aggregated mean rating for Capital Projects is 3.8 on a scale where 1 means not at all important and 5 means essential. Chart 6 shows the percentage of respondents rating each type of capital project very important or essential.

Chart 6

Importance of Capital Projects

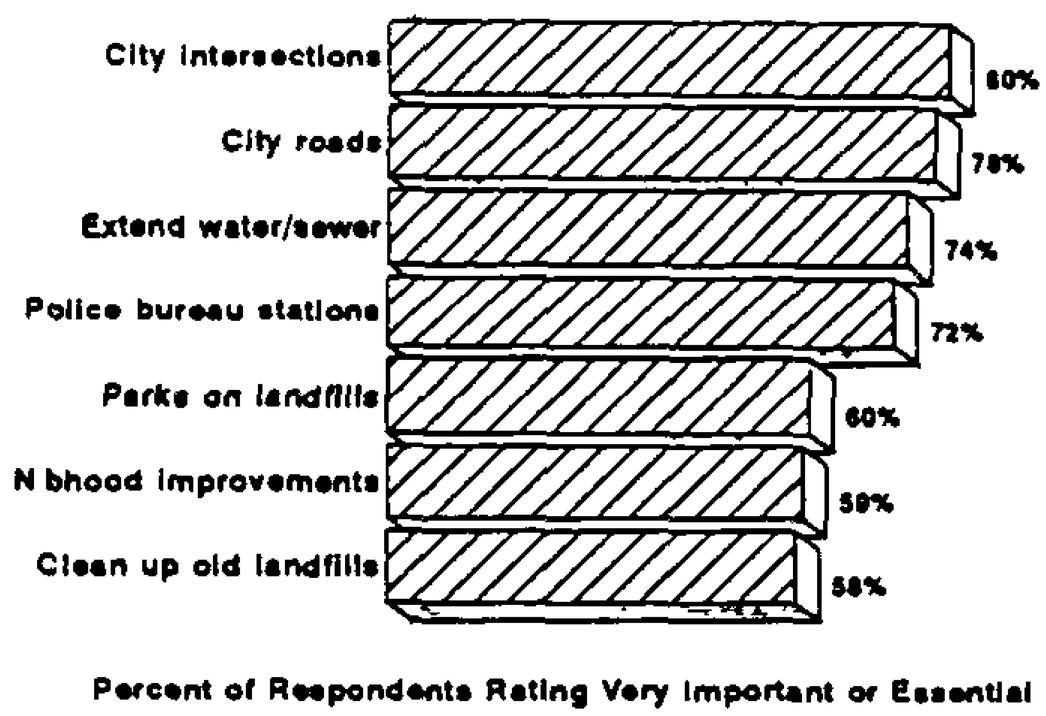

The majority of respondents rate all Capital Projects either very important or essential. Respondents put their highest priorities on infrastructure issues with the highest importance ratings going to improving busy intersections (80%), widening and constructing city roads (78%), extending water and sewer lines (74%), and locating police bureau stations in neighborhoods (72%). However, neighborhood improvements like curbs, gutters and sidewalks have just 59% of respondents rating them very important or essential.

Funding for Capital Projects

A modest increase in property taxes specifically to support Capital Projects has strong support among survey respondents. Sixty-five percent are willing to pay $10 more a year in taxes. When respondents were asked if they would pay $5 more per year in property taxes, another 8% responded positively. However, 27% of respondents are not willing to pay more taxes to fund Capital Projects.

Suggestions for getting funding for Capital Projects center around bonds and taxes. Eighteen percent of respondents say the City should issue bonds to pay for Capital Projects, and 35% say the City should raise taxes (property, sin, luxury taxes). Another 22% say the City should cut spending, and 12% of respondents suggest having fund raisers.

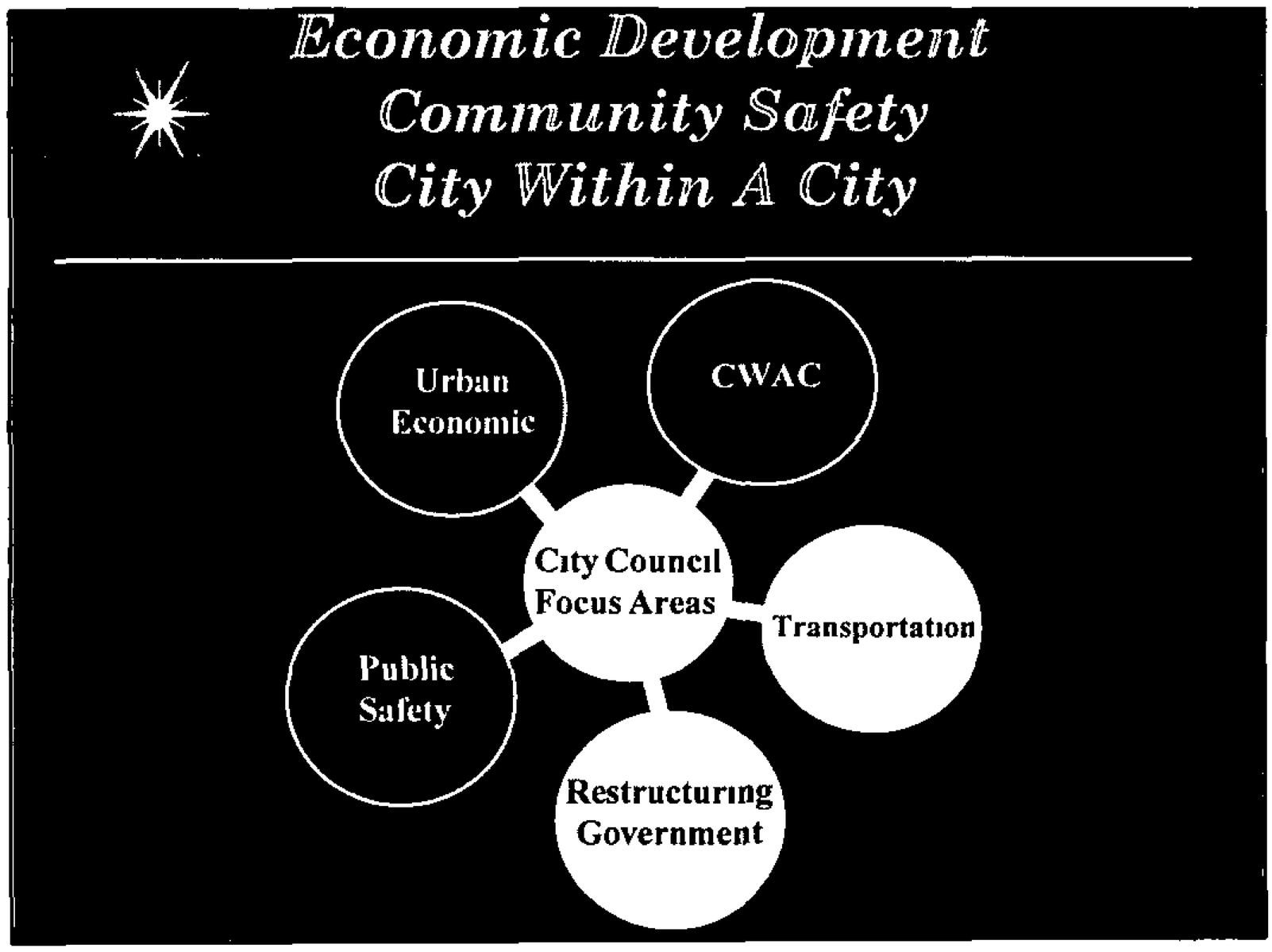
Economic Development
Community Safety
City Within A City
Urban Economic
CWAC
City Council Focus Areas
Transportation
Public Safety
Restructuring Government

Notes:

Urban Economic Policy
Vision

To create a customer-oriented local environment that:

- ◇ supports development of an educated work force
- ◇ fosters partnerships to aid local economic growth;
- ◇ retains and attracts businesses;
- ◇ provides necessary land, infrastructure, and incentives to support business development;
- ◇ focuses on opportunities for all citizens to be productive contributors to the economy; and
- ◇ organizes to be responsive to economic development opportunities.

Notes:

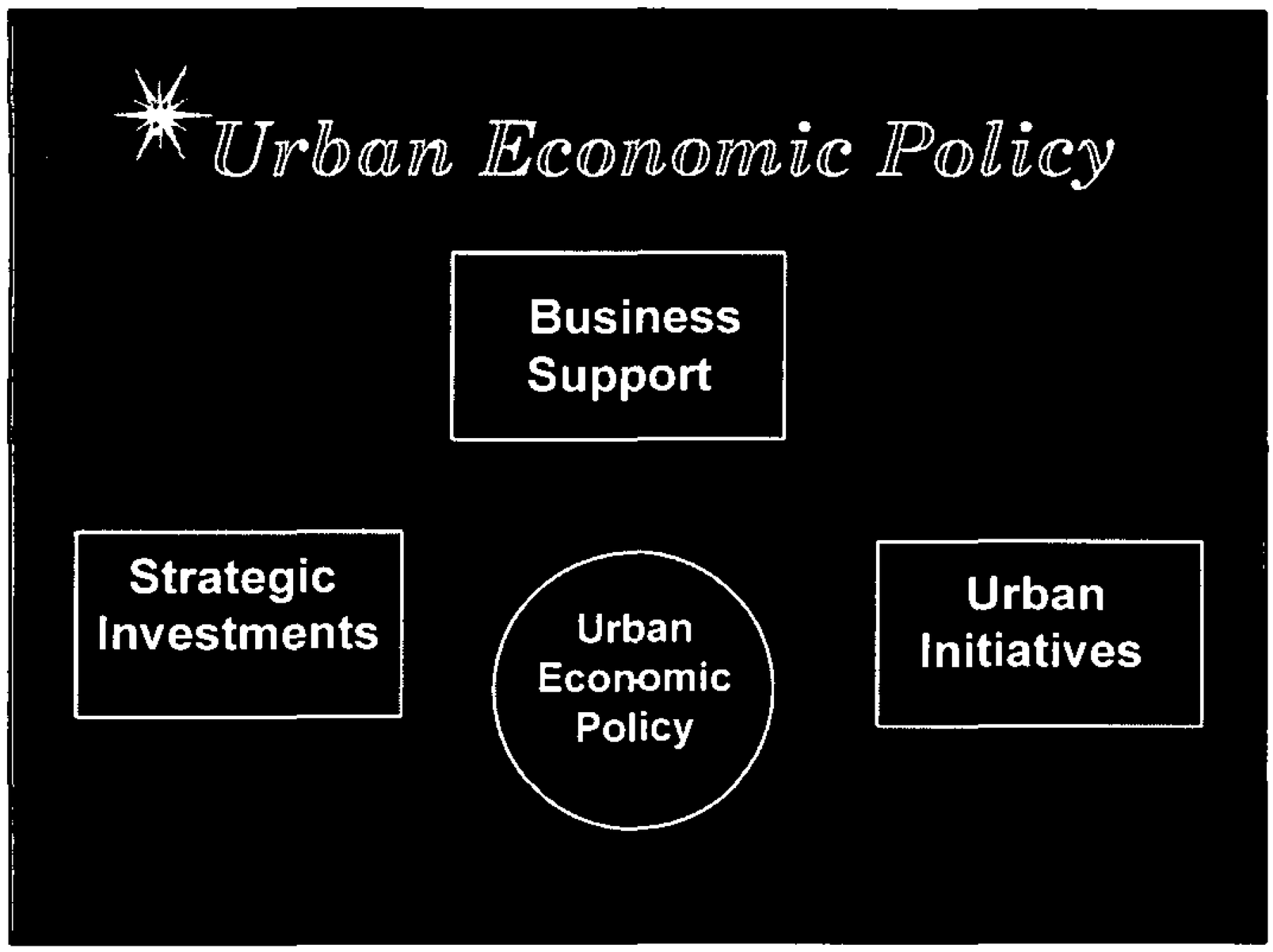
Urban Economic Policy
Business Support
Strategic Investments
Urban Economic Policy
Urban Initiatives

Notes:

Urban Economic Policy

Business Support

- Customer Service
- Workforce Development
- Partnerships
- Industry Targeting
- Business Incentives
- Public Safety

Notes:

Urban Economic Policy

Business Support

FY96-97 Budget:

- No new money is requested
- Existing resources will be reassigned to meet the strategic plan objectives

Urban Economic Policy

Strategic Investments

- Capital Investment Program
- Transportation
- Water and Sewer
- Airport Development
- Asset Management
- Capital Facilities Joint Use

Notes:

Urban Economic Policy

Strategic Investments

FY96-97 Budget:

- 5 Year CIP is $772 million; 16% decrease from FY95
- Highlights:
  - Transportation ($9.3 million)
  - Transit ($23.9 Million)
  - Water & Sewer ($308.5 million)
  - Airport ($275.2 million)

Notes:

Urban Economic Policy

Urban Initiatives

- Uptown
- City Within A City
- Business Corridors Revitalization
- City West

Notes:

Urban Economic Policy

Urban Initiatives

FY96-97 Budget:

- Neighborhood Reinvestment ($2.0 million)
- Business Corridor Revitalization ($2.0 million)

South Boulevard	North Tryon St.
Wilkinson Blvd	Davidson St.
Plaza Central Avenue	Graham St.
Beatties Ford Rd.	Statesville Rd.

Notes:

Community Safety Plan

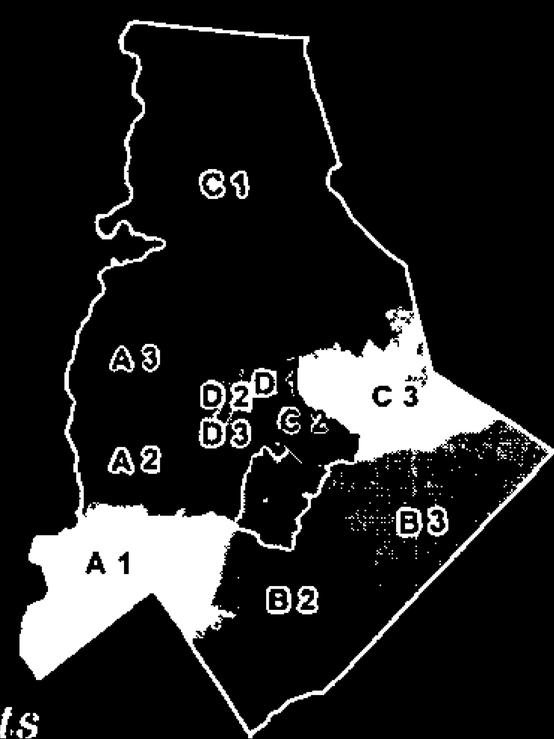

12 Police Districts

Notes:

Community Safety Plan
Mission

The Mission of the Community Safety Plan is to:

- Develop an integrated, comprehensive, five year plan for the City of Charlotte to best utilize its resources to reduce crime and to increase the perception of community safety;
- Determine an approach to crime that includes prevention, intervention and enforcement strategies;
- Position neighborhoods for self-sufficiency;
- Identify types of offenders (i.e., violent, youthful, substance abusing, repeat) on which to focus efforts;

Notes:

Community Safety Plan
Mission (Continued)

The Mission of the Community Safety Plan is to:

- Participate with the Mecklenburg County Commission, the Charlotte-Mecklenburg School Board, and the State of North Carolina to improve the criminal justice system; and
- Provide an annual evaluation of goals and strategies

Notes:

Community Safety Plan
Violent Crime
Decrease Crime
Youthful Offenders
Substance Abuse
Community Safety
Repeat Offenders
Resource Utilization
Process & Evaluation

Notes:

Community Safety Plan

Decrease Crime

- Strengthen partnerships between residents, business owners and police
- Improve conditions in distressed neighborhoods and business areas
- Protect and maintain stable neighborhoods and business areas
- Help individuals become self-sufficient

Notes:

Community Safety Plan

Decrease Crime

FY96-97 Budget:

- Crime in Charlotte decreased 4.4% in 1994 with a 10% decrease in violent crime
- Currently, 98 Community Policing Officers are assigned to 206 neighborhoods

Notes:

Community Safety Plan

Violent Crime

- Decrease use of guns in criminal acts
- Decrease domestic violence and impact on children
- Increase police resources in dealing with violent crime

Notes:

Community Safety Plan
Violent Crime

FY96-97 Budget:

- New Domestic Violence Unit funded ($438,657)
- Homicide Section has increased from 15 to 22 officers
- Homicide's 1994 clearance rate was 90%, well above the national average

Notes:

Community Safety Plan

Youthful Offenders

- Coordinate children services
- Promote family self-sufficiency
- Work jointly with Schools
- Increase public and private efforts
- Increase resources to focus on youth crimes
- Determine appropriate rehabilitation programs

Notes:

Community Safety Plan
Youthful Offenders

FY96-97 Budget:

- The SHOCAP Program will link Police, District Attorney, Court System, Dept. of Corrections and School System in an information system
- Youth Bureau has increased from 12 to 17 officers and support staff ($781,332)
- The Serious Juvenile Crime Unit targets repeat offenders ($396,000)

Notes:

Community Safety Plan
Substance Abuse

- Decrease demand for drugs and alcohol
- Decrease supply of drugs and alcohol
- Coordination of the treatment programs and accountability to judicial system

Notes:

Community Safety Plan
Substance Abuse

FY96-97 Budget:

- Street Drug Interdiction activities increased from 22 to 34 officers ($1.4 million)
- Street drug interdiction activities are more closely linked to community policing

Notes:

Community Safety Plan
Repeat Offenders

- Focus on successful programs
- Assist parolees to remain crime free
- Make Parole Board aware of higher incidence of crime in Charlotte-Mecklenburg and criminal history of candidates for early parole

Notes:

Community Safety Plan

Resource Utilization

- Increase effectiveness through adequate training
- Increase effectiveness through support staff

Notes:

Community Safety Plan
Resource Utilization

FY96-97 Budget:

- 40 hours of in-service training to improve communication and problem-solving skills to all officers and 20 hours to support personnel
- Added 31 support positions ($839,000)

Notes:

Community Safety Plan
Process & Evaluation

- Create a process for determining future strategies
- Accountability for plan implementation
- Improve information available to decision makers
- Increase effectiveness for dollars spent for public safety
- Improve efficiency of resources

Notes:

Community Safety Plan
Process & Evaluation

FY96-97 Budget:

- Making greater use of technology ($600,000) which includes:
  - Automated patrol line-ups
  - Departmental LAN to connect LEC and outlying police facilities

Notes:

Community Safety Plan
Budget Highlights

- Continues full funding of all of the initiatives in the *Community Safety Plan*
- Funds not expended in FY95 are carried over into this year's budget
- $772,000 has been added to accelerate the decentralization of police services

Notes:

Community Safety Plan
Additional Strategies

- The Fire Department is working to:
  - develop community based fire prevention education
  - develop arson intervention and prevention programs
  - identify vacant properties where there is a risk of a fire being set
  - increase the juvenile firesetters program and expand interaction between Police, Fire and Courts

Notes:

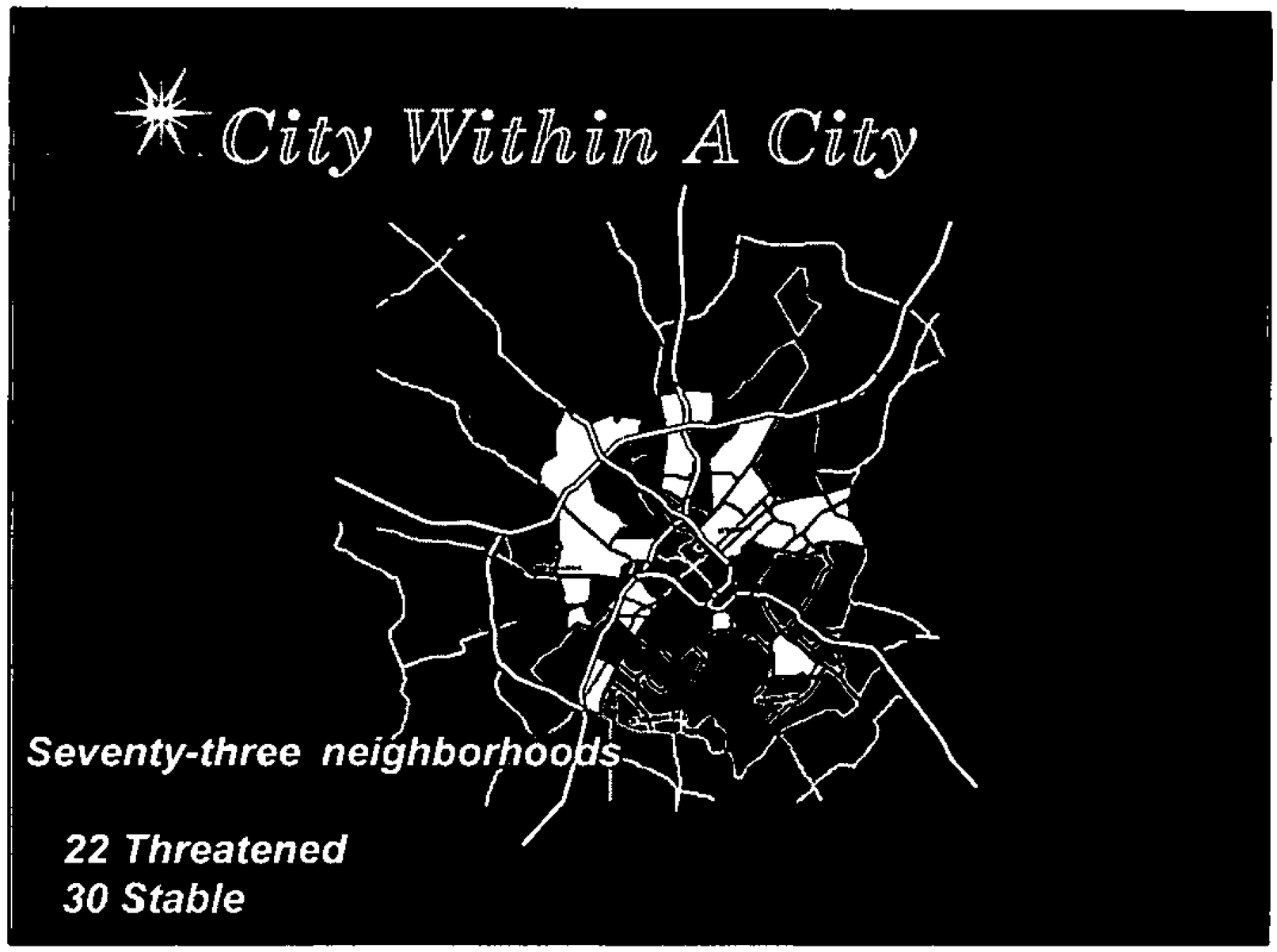
City Within A City
Seventy-three neighborhoods
22 Threatened
30 Stable

Notes:

City Within A City Vision

"To design, channel, and support public and private sector activities that contribute to sustained economic development and a high quality of life in Charlotte older neighborhoods and business areas."

Notes:

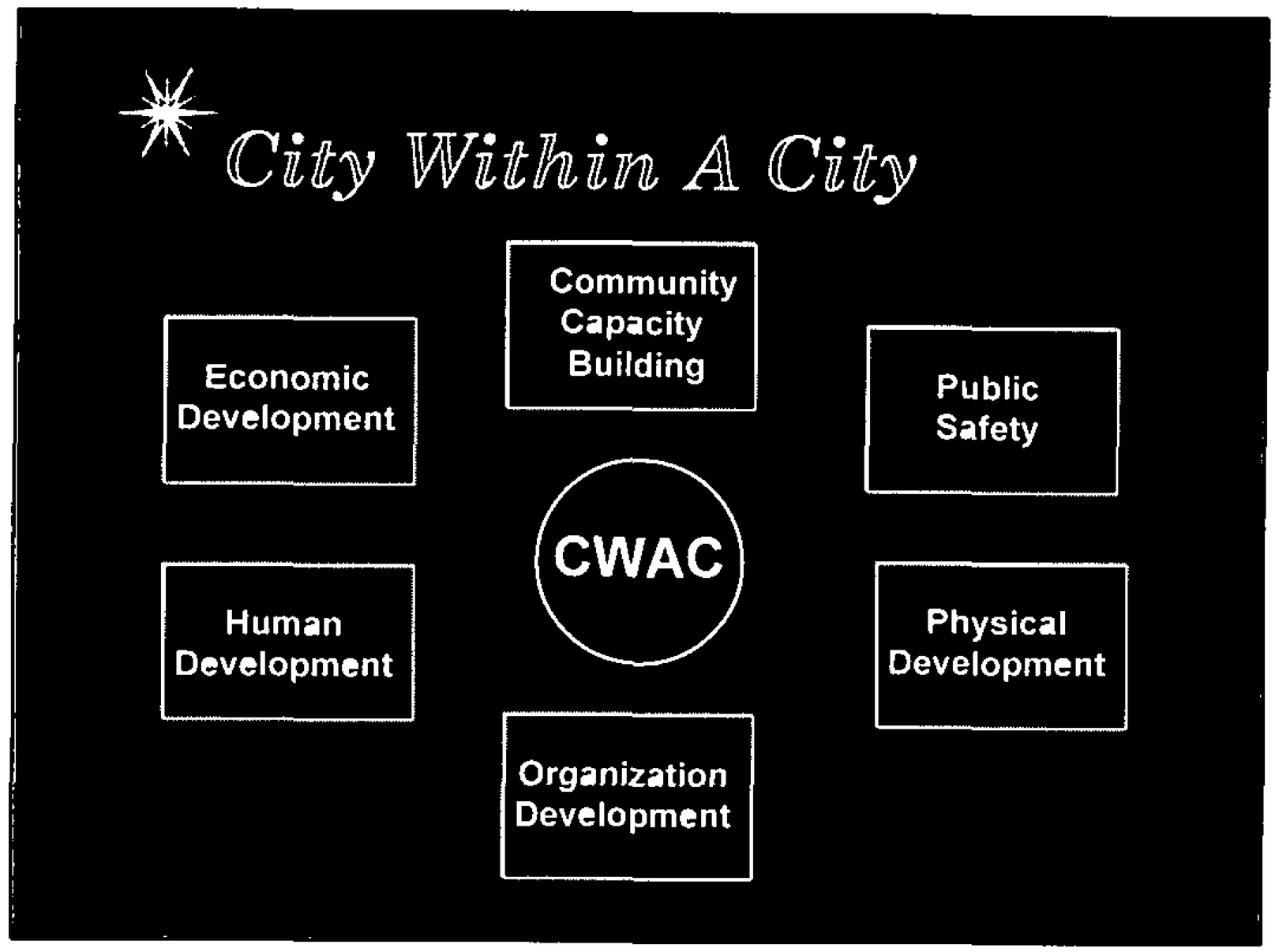
City Within A City
Community Capacity Building
Economic Development
Public Safety
CWAC
Human Development
Physical Development
Organization Development

Notes:

City Within A City
Organization Development

- Getting Government and Partners Organized
- Targeting Resources To Make A Difference
- Making Everyone Accountable and Responsible

Notes:

City Within A City
Organization Development

- Getting Government and Partners Organized
- Targeting Resources To Make A Difference
- Making Everyone Accountable and Responsible

Notes:

City Within A City

Geographic Targeting

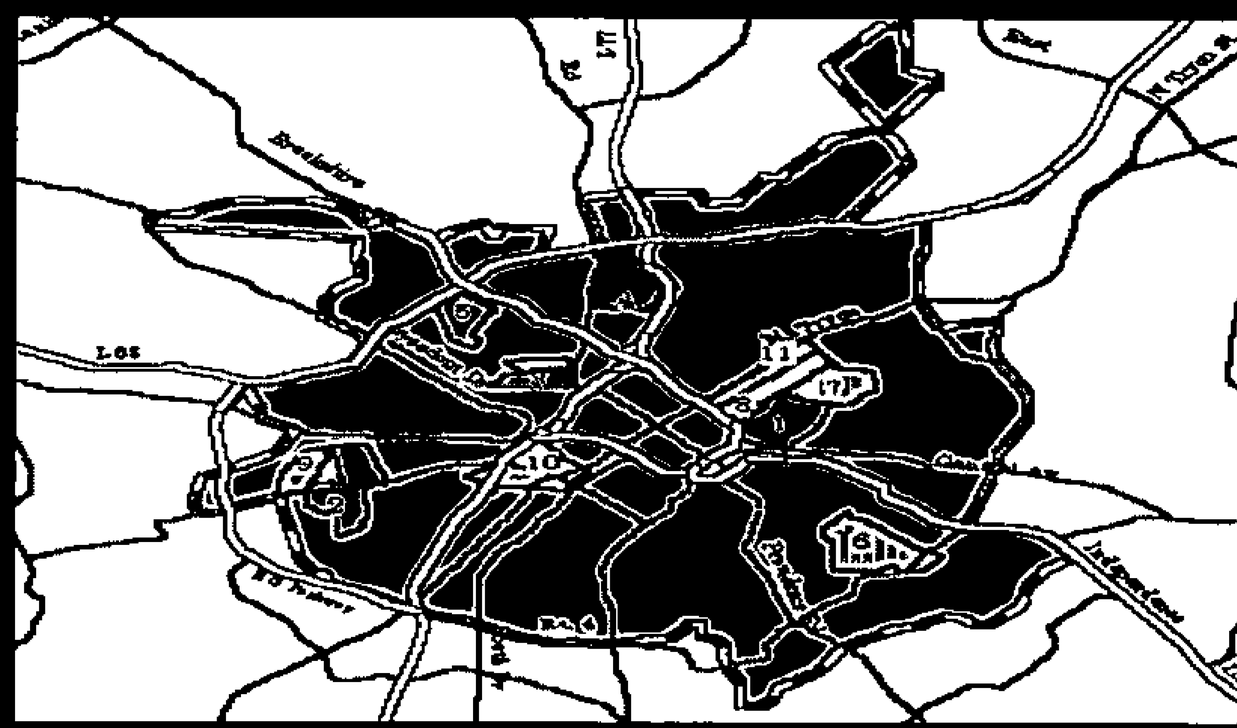

Notes:

City Within A City
Organization Development

FY96-97 Budget:

- Neighborhood Development reduced by 5.25 positions to 112 positions
- Organized into 5 operational divisions consistent with strategic plan:

  Physical Development, Economic Development, Human Development, Community Empowerment and CRC

Notes:

City Within A City

Community Safety

- Adopted Community Safety Plan in 1994
- Prevention and Enforcement Strategies
- Success Linked To **CWAC** (*Capacity Building, Economic Development, Physical Development, Self-Sufficiency and Organization Development*)

Notes:

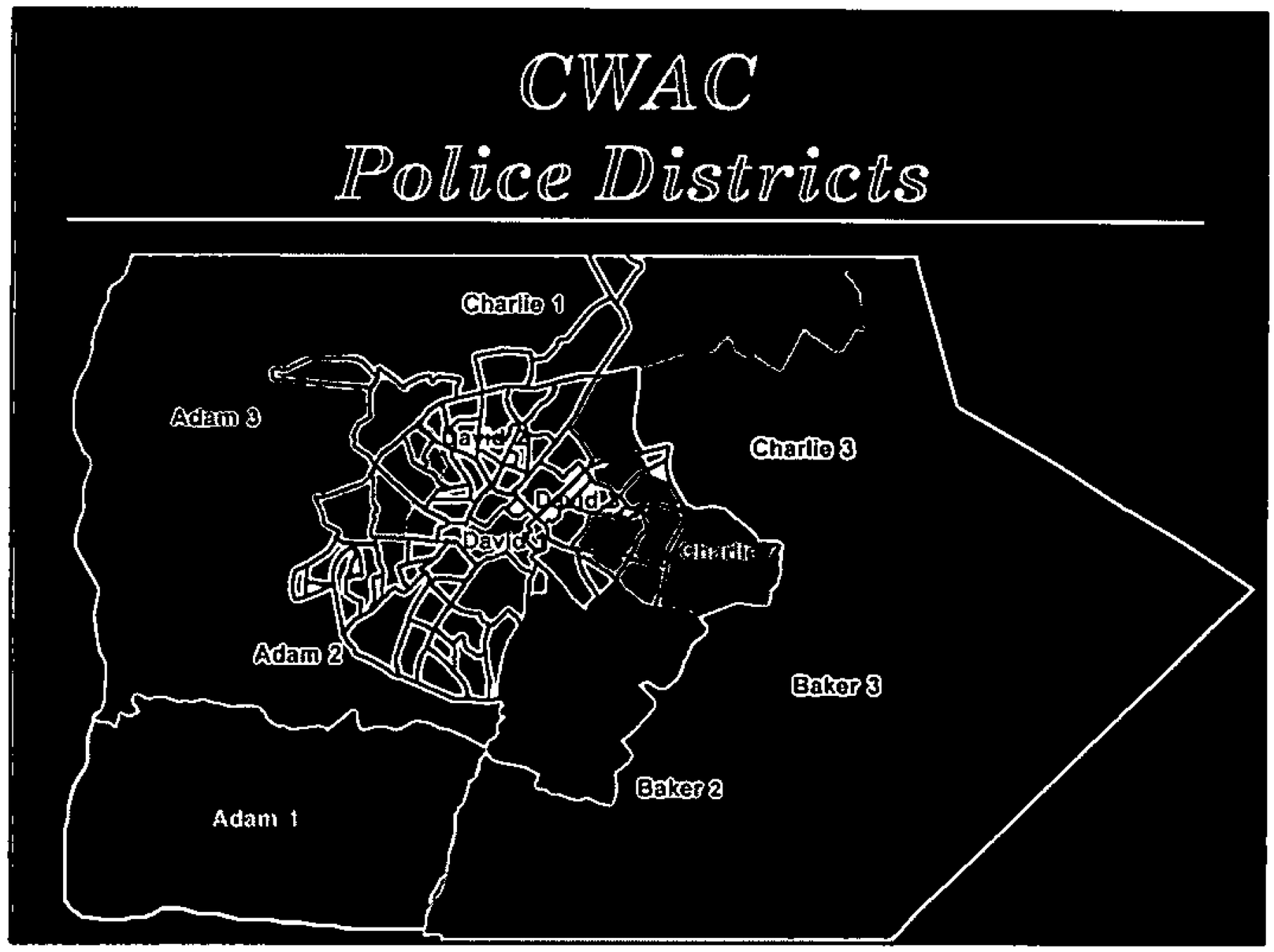
CWAC
Police Districts
Charlie 1
Adam 3
Charlie 3
Adam 2
Baker 3
Baker 2
Adam 1

Notes:

City Within A City

Physical Development

- Decent and Affordable Housing
- Upgrading Infrastructure
- Improving Community Appearance
- Addressing Other Community Facilities

Notes:

City Within A City

Physical Development

FY96-97 Budget:

- Federal housing funds are no longer growing
- Better coordination and targeting of investments to Action Plan neighborhoods

Notes:

City Within A City

Community Capacity Building

- Empowering Neighborhood Organizations and Community Development Corporations (*CDC's*)
- Supporting Neighborhood Based Initiatives

Notes:

City Within A City

Community Capacity Building

FY96-97 Budget:

- Continue to promote Neighborhood Matching Grants Program
- Work with partners to develop neighborhood leadership training opportunties ($50,000)

Notes:

City Within A City

Human Development

- Employment and Training
- Enterprise Community Grant
- Access to Jobs - Innovative Transportation and Daycare
- Self-Sufficiency

Notes:

City Within A City

Human Development

FY96-97 Budget:

- JTPA funds decreased 12% to $2.4 million in FY96 (4 positions eliminated)
- Innovative transportation strategy being developed by Neighborhood Development & CDOT

Notes: